Miele

Operating instructions for dishwashers

To avoid the risk of accidents or damage to the appliance, it is **essential** to read these instructions as well as the installation sheet before it is installed and used for the first time.

en-GB HG06 M.-Nr. 10 384 601

Contents

Guide to the appliance 6
Overview 6
Control panel 7

Warning and Safety instructions 8

Caring for the environment 17
Energy saving washing 18

Before using for the first time 19
Opening the door 19
Closing the door 19
Safety lock 19
Water softener 20
Displaying and setting the water hardness 21
Before using the appliance for the first time, you require: 23
Dishwasher salt 23
Filling the salt reservoir 24
Add salt reminder 25
Rinse aid 26
Adding rinse aid 26
Rinse aid refill reminder 27
Setting the rinse aid dosage 28

Loading the dishwasher 29
Notes 29
FlexAssist 31
Upper basket 31
Adjusting the upper basket 32
Lower basket 33
Cutlery 35
Cutlery tray 35
Loading examples 36
Dishwashers with cutlery tray 36

Operation 38
Detergent 38
Adding detergent 40
Switching on 41
Selecting a programme 41
Starting a programme 42
Time display 42
Energy management 43
At the end of the programme 43

Contents

Switching off 44
Unloading the dishwasher 44
Interrupting a programme 45
Changing a programme 45

Programme options 46
Short 46
DetergentAgent 46
Refill reminders 47
Delay start 48
Adjust Automatic 50
Memory 51
Optimise standby 52
Factory default 53

Programme chart 54

Cleaning and care 58
Cleaning the wash cabinet 58
Cleaning the door and the door seal 58
Cleaning the door front 59
Checking the filters in the wash cabinet 60
Cleaning the filters 60
Cleaning the spray arms 62

Problem solving guide 63
Technical problems 63
Water inlet fault 65
Water drainage fault 65
General problems 66
Noises 67
Unsatisfactory washing result 68

Maintenance 71
Cleaning the water inlet filter 71
Cleaning the drain pump and non-return valve 72

After sales service 73
Repairs 73
Guarantee 73
Note for test institutes 73

Optional accessories 74

Electrical connection 76

Contents

Plumbing 77
The Miele waterproof anti-leak system 77
Connection to the water supply 77
Drainage 78

Technical data 79
Data sheet for household dishwashers 80

Guide to the appliance

Overview

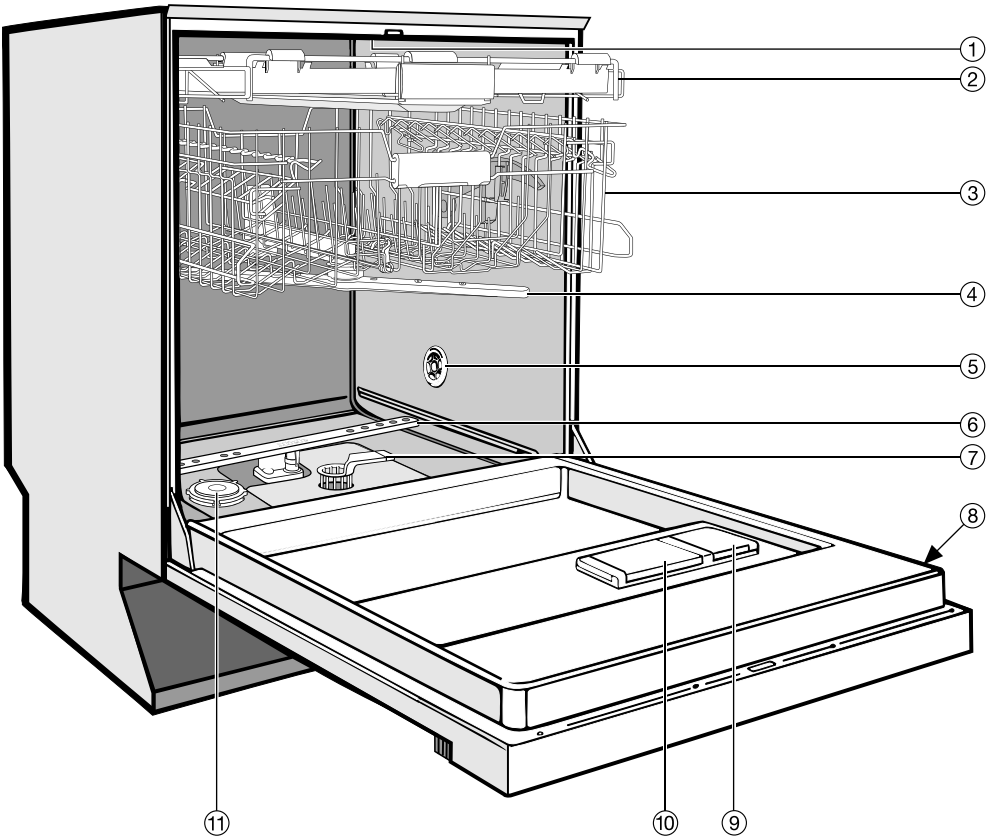

① Upper spray arm (not visible)

② Cutlery tray (depending on model)

③ Upper basket

④ Middle spray arm

⑤ Air inlet for drying (depending on model)

⑥ Lower spray arm

⑦ Filter combination

⑧ Data plate

⑨ Rinse aid reservoir

⑩ Dual compartment detergent dispenser

⑪ Salt reservoir

Control panel

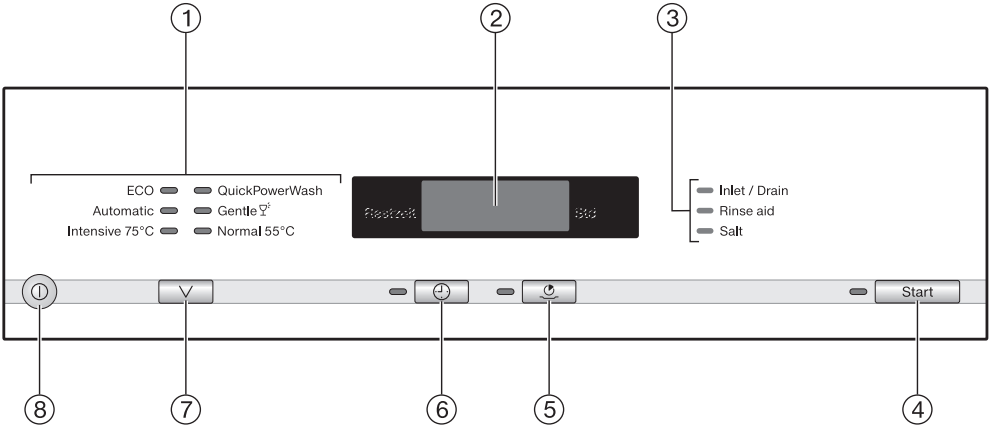

① Programmes

② Time display

③ Check / Refill indicators

④ *Start* button with indicator light

⑤ Short button with indicator light

⑥ Delay start button with indicator light

⑦ Programme selector button ∨

⑧ On/Off button

Warning and Safety instructions

This dishwasher complies with current safety requirements. Inappropriate use can, however, lead to personal injury and damage to property.

To avoid the risk of accidents and damage to the dishwasher, please read the installation sheet and the operating instructions carefully before it is installed and used for the first time. They contain important information on its installation, safety, use and maintenance.

Keep the installation sheet and the operating instructions in a safe place and pass them on to any future owner.

Miele cannot be held liable for damage caused by non-compliance with this information.

Correct application

▶ This dishwasher is intended for use in domestic households and similar working and residential environments.

▶ The dishwasher is not intended for outdoor use.

▶ It must only be used as a domestic appliance as specified in these operating instructions, for cleaning domestic crockery and cutlery. Any other usage is not supported by the manufacturer and could be dangerous.

▶ The appliance can only be used by people with reduced physical, sensory or mental capabilities, or lack of experience and knowledge, if they are supervised whilst using it, or have been shown how to use it in a safe way and recognise and understand the consequences of incorrect operation.

Safety with children

▶ Children under 8 years of age must be kept away from the appliance unless they are constantly supervised.

▶ Children 8 years and older may only use the dishwasher unsupervised if they have been shown how to use it safely and recognise and understand the consequences of incorrect operation.

▶ Children must not be allowed to clean or maintain the appliance unsupervised.

▶ Please supervise children in the vicinity of the dishwasher and do not let them play with it. There is a danger that children playing might shut themselves in the dishwasher.

▶ If the automatic door opening mechanism (depending on model) is active keep young children away from the area in which the door opens. Danger of injury in the unlikely event of a fault with the opening mechanism.

▶ Danger of suffocation. Packaging, e.g. plastic wrappings, must be kept out of the reach of babies and children. Whilst playing, children could become entangled in packaging or pull it over their head and suffocate.

▶ Keep children away from detergents. Dishwasher detergents can cause burning in the mouth, nose and throat if swallowed, or inhibit breathing. Keep children away from the dishwasher when the door is open. There could still be detergent residues in the cabinet. Seek medical attention immediately if your child has swallowed or inhaled detergent.

Technical safety

▶ Unauthorised installation, maintenance and repairs can cause considerable danger for the user. Installation, maintenance and repairs must only be carried out by a Miele authorised technician.

▶ A damaged dishwasher is dangerous. Check it for any recognisable damage. Never install or attempt to use a damaged appliance.

▶ The electrical safety of this appliance can only be guaranteed when correctly earthed. It is essential that this standard safety requirement is met. If in any doubt, please have the electrical installation tested by a qualified electrician.
Miele cannot be held liable for the consequences of an inadequate earthing system (e.g. electric shock).

▶ Reliable and safe operation of this dishwasher can only be assured if it has been connected to the mains electricity supply.

▶ The dishwasher must only be plugged into the electricity supply via a suitable switched socket using a suitable fused plug (it must not be hard-wired). The electrical socket must be easily accessible after the dishwasher is installed so that it can be disconnected from the electricity supply at any time.

▶ There must be no electrical sockets behind the dishwasher. Danger of overheating and fire risk if the dishwasher were to be pushed up against a plug.

▶ The dishwasher must not be installed under a hob. The high radiant temperatures which are sometimes generated by a hob could damage the dishwasher. For the same reason it should not be installed next to open fires or other appliances which give off heat, such as heaters etc.

▶ To avoid the risk of damage to the dishwasher, make sure that the connection data on the data plate (fuse rating, voltage and frequency) match the mains electricity supply before connecting the dishwasher to the mains. Consult a qualified electrician if in doubt.

▶ Do not connect the dishwasher to the mains supply until it has been fully installed and any adjustment has been made to the door springs.

▶ The dishwasher may only be operated if the door opening mechanism is working correctly. Otherwise there could be a risk of danger whilst the automatic door opening mechanism (depending on model) is active.
To check that the door opening mechanism is working correctly:

- the door springs must be adjusted equally on both sides. They are correctly adjusted when the door remains stationary when left half open (approx. 45° opening angle). It is also important that the door cannot fall open.
- the door locking pins automatically retract when the door opens at the end of the drying phase.

▶ Do not connect the appliance to the mains electricity supply by a multi-socket adapter or an extension lead. These do not guarantee the required safety of the appliance (fire hazard).

▶ The appliance must not be used in a non-stationary location (e.g. on a ship).

▶ Do not install the dishwasher in a room where there is a risk of frost. Frozen hoses may burst or split. The reliability of the electronic control unit may be impaired at temperatures below freezing point.

▶ To avoid any damage to the appliance, the dishwasher must only be operated when it is connected to a fully vented plumbing system.

▶ The plastic housing of the water connection contains an electrical component. It must not be dipped in water.

▶ There are electrical wires in the water inlet hose. Do not shorten the water inlet hose, even if it is too long.

▶ The integrated Waterproof system offers protection from water damage, provided the following conditions are met:

- The dishwasher is correctly installed and plumbed in.
- The dishwasher is properly maintained and parts are replaced where it can be seen that this is necessary.
- the stopcock is turned off during longer absences from the home (e.g. whilst on holiday).

The Waterproof system will work even if the appliance is switched off. However, the appliance must remain connected to the electricity supply.

▶ The water pressure (flow pressure at the take-off point) must be between 50 and 1000 kPa (0.5 and 10 bar).

▶ If the dishwasher gets damaged, switch it off at the mains immediately and call your Miele Dealer or the Miele Service Department.

▶ While the appliance is under warranty, repairs should only be undertaken by a Miele authorised service technician. Otherwise the warranty is invalidated.

▶ Miele can only guarantee the safety of the appliance when genuine original Miele replacement parts are used. Faulty components must only be replaced by Miele spare parts.

▶ During installation, maintenance and repair work, the appliance must be disconnected from the mains electricity supply (switch it off and withdraw the plug from the socket).

▶ If the connection cable is damaged it must be replaced with a special cable of the same type (available from Miele). For safety reasons this work must be carried out by a Miele authorised service technician only.

▶ This dishwasher is supplied with a special lamp to cope with particular conditions (e.g. temperature, moisture, chemical resistance, abrasion resistance and vibration). This special lamp must only be used for the purpose it is intended for. It is not suitable for room lighting. Replacement lamps may only be fitted by a Miele authorised person or the Miele Service Department.

Correct installation

▶ The dishwasher must be installed and connected in compliance with the installation sheet supplied.

▶ Take care, both before and during installation of the dishwasher, not to cut yourself on the metal parts. Danger of injury. Wear protective gloves.

▶ The dishwasher must be correctly aligned to ensure problem-free operation.

▶ In order to ensure stability, built-under and integrated dishwashers must only be installed under a continuous worktop which is secured to adjacent cabinetry.

▶ If you want to convert your freestanding dishwasher to a built-under (“U”) model, you will need to order the appropriate conversion kit. If you remove the existing plinth, you must replace it with a U-model plinth. This is necessary to avoid the risk of injury caused by protruding metal parts.

▶ The door springs must be adjusted equally on both sides. They are correctly adjusted when the door remains stationary when left half open (approx. 45° opening angle). It is also important that the door cannot fall open.
The appliance may only be used with correctly adjusted door springs.

Correct use

▶ Do not use solvents in the dishwasher. Danger of explosion.

▶ Do not inhale or ingest dishwasher detergent. Dishwasher detergents can cause burning in the nose, mouth and throat if swallowed, or inhibit breathing. Seek medical attention immediately if detergent has been swallowed or inhaled.

▶ You could injure yourself on the open dishwasher door or trip over it. Avoid leaving the door open unnecessarily.

▶ Do not sit or lean on the opened door. This could cause the dishwasher to tip and be damaged, and you could get injured.

▶ Dishes can be very hot at the end of the programme. Allow them to cool until they are comfortable enough to handle before unloading.

▶ Only use detergent and rinse aid formulated for domestic dishwashers. Do not use washing-up liquid.

▶ Do not use commercial or industrial detergents as these may cause damage, and there is a risk of a severe explosive chemical reaction (such as an explosive oxyhydrogen gas reaction).

▶ Do not fill the rinse aid reservoir with powder or liquid detergent. This will cause serious damage to the reservoir.

▶ Inadvertently filling the salt reservoir with powder or liquid dishwasher detergent will damage the water softener. Make sure you have picked up the correct packet of dishwasher salt before filling the salt reservoir!

▶ Only use special coarse grained dishwasher salt for reactivation. Do not use other salts such as cooking salt, agricultural grade or gritting salt. These may contain insoluble additives which can impair the functioning of the water softener.

▶ In an appliance with a cutlery basket (depending on model), cutlery is cleaned and dried more efficiently if placed in the basket with the handles downwards. However, to avoid the risk of injury, place knives and forks etc. with the handles upwards.

▶ Plastic items which cannot withstand being washed in hot water, such as disposable plastic containers or plastic cutlery should not be cleaned in the dishwasher. The high temperatures in the dishwasher may cause them to melt or lose shape.

▶ If you use the “FlexiTimer/Delay start” option (depending on model), make sure that the dispenser is dry before adding detergent. Wipe dry if necessary. Detergent will clog if poured into a damp dispenser and may not be thoroughly dispersed.

▶ Please observe the information given in “Technical data” regarding the capacity of the dishwasher.

Accessories

▶ Only use genuine original Miele accessories and spare parts with this appliance. Using accessories or spare parts from other manufacturers will invalidate the guarantee, and Miele cannot accept liability.

Disposal of your old dishwasher

▶ Make the door lock inoperative so that children cannot accidentally shut themselves in. Make appropriate arrangements for the disposal of the appliance.

Disposal of the packing material

The packaging is designed to protect the appliance from damage during transportation. The packaging materials used are selected from materials which are environmentally friendly for disposal and should be recycled.

Recycling the packaging reduces the use of raw materials in the manufacturing process and also reduces the amount of waste in landfill sites.

Disposing of your old appliance

Electrical and electronic appliances often contain valuable materials. They also contain specific materials, compounds and components, which were essential for their correct function and safety. These could be hazardous to human health and to the environment if disposed of with your domestic waste or if handled incorrectly. Please do not, therefore, dispose of your old appliance with your household waste.

Please dispose of it at your local community waste collection / recycling centre for electrical and electronic appliances, or contact your dealer or Miele for advice. You are also responsible for deleting any personal data that may be stored on the appliance being disposed of. Please ensure that your old appliance poses no risk to children while being stored prior to disposal.

Caring for the environment

Energy saving washing

This dishwasher is exceptionally economical in its use of water and electricity.
You can make the most of your appliance by following these tips:

- For most economical dishwashing, make full use of the baskets without overloading the dishwasher.
- Choose the programme to suit the type of crockery being washed and the degree of soiling.
- Select the *ECO* programme (depending on model) for energy-saving dishwashing. This programme is the most efficient in terms of its combined energy and water consumption at cleaning normally soiled crockery.
- Follow the detergent manufacturer's recommendations on detergent dosage.
- When using powder or liquid detergent you can use $^{1}/_{3}$ less detergent if baskets are only half full.
- If your household water system is suitable, this dishwasher can be connected to a hot water supply for further economies. If the water is heated by for example, solar panels, this would be energy efficient.
  However, if your water is heated by electricity we would recommend connection to cold water.

Opening the door

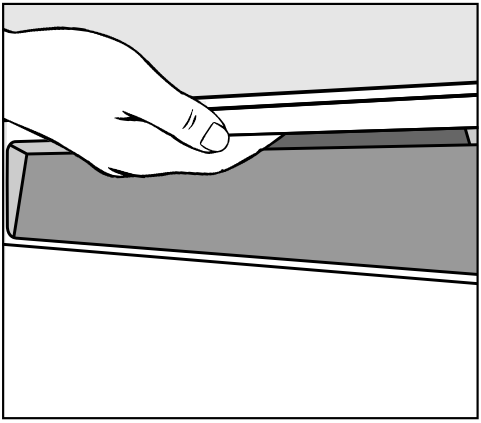

- To open the door, reach under the door grip and pull.

If the door is opened during operation all functions are automatically interrupted.

⚠ Water in the dishwasher may be hot. Danger of scalding.
Only open the door during operation if absolutely necessary and exercise extreme caution when doing so.

Closing the door

- Push the baskets right in.
- Then raise the door up, and push until it clicks into position.

⚠ Danger of injury.
Do not put your hand inside the door as it is closing.

Safety lock

The child safety lock can be used to prevent children opening the dishwasher. The door can then only be opened by using a lot of force.

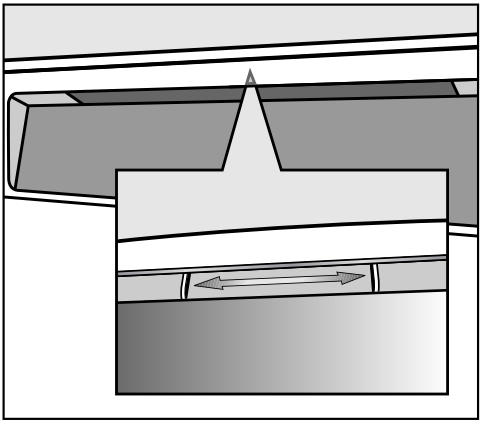

- To lock the door, push the slide underneath the door grip to the right.
- To unlock the door, push the slide to the left.

Water softener

In order to achieve good cleaning results, the dishwasher needs to operate with soft water. Hard water results in a build-up of calcium deposits on crockery and in the dishwasher.
Mains water with a hardness level higher than 0.7 mmol/l (4 °dH - German scale) needs to be softened. This takes place automatically in the integrated water softener. The water softener in the dishwasher is suitable for a water hardness level of up to 12.6 mmol/l (70 °dH - German scale).

- The water softener requires dishwasher salt.
  Depending on the water hardness level (< 3.8 mmol/l, or 21 °dH - German scale), dishwasher salt is not required if combination tablets are being used (see “Operation, Detergent”).
- The dishwasher must be programmed to the correct water hardness for your area.
- Your local water authority will be able to advise you of the water hardness level in your area.
- Where the water hardness fluctuates e.g. between 1.8 and 2.7 mmol/l (10 - 15 °dH - German scale) always programme the dishwasher to the higher value (2.7 mmol/l or 15 °dH in this example).

In the event of a fault, it will help the service technician if you know the hardness of your local water supply.

Enter the water hardness below:

_____mmol/l or °dH

The dishwasher is programmed at the factory for a water hardness level of 2.7 mmol/l (15 °dH - German scale).

If this setting corresponds to the hardness of your water you do not need to do anything more.

However, if you have a different water hardness you must adjust the water softener to match your water hardness.

Displaying and setting the water hardness

- Switch the dishwasher off with the ⏻ button, if it is switched on.
- Press the *Start* button in and **whilst holding it in** switch the dishwasher on using the ⏻ button.
  Keep the *Start* button pressed in for at least four seconds until the *Start* indicator light comes on.

If this does not happen, start the procedure from the beginning again.

- Press the ⏲ button twice.

The ⏲ indicator will flash rapidly twice at intervals.

The value set for the water hardness is shown as a figure after *P* in the display (see chart).

P 1 5 will start flashing in the display. This is the factory default setting of 15°dH.

- Use the *Start* button to select the value which equates to your water hardness level.
  Each press on the button moves you up a level. When the highest water hardness level is reached, the setting starts from the beginning again.

The setting is now stored in memory.

- Switch the dishwasher off with the ⏻ button.

°dH	mmol/l	°fH	Display
1	0.2	2	1
2	0.4	4	2
3	0.5	5	3
4	0.7	7	4
5	0.9	9	5
6	1.1	11	6
7	1.3	13	7
8	1.4	14	8
9	1.6	16	9
10	1.8	18	10
11	2.0	20	11
12	2.2	22	12
13	2.3	23	13
14	2.5	25	14
15	2.7	27	15
16	2.9	29	16
17	3.1	31	17
18	3.2	32	18
19	3.4	34	19
20	3.6	36	20

°dH	mmol/l	°fH	Display
21	3.8	38	21
22	4.0	40	22
23	4.1	41	23
24	4.3	43	24
25	4.5	45	25
26	4.7	47	26
27	4.9	49	27
28	5.0	50	28
29	5.2	52	29
30	5.4	54	30
31	5.6	56	31
32	5.8	58	32
33	5.9	59	33
34	6.1	61	34
35	6.3	63	35
36	6.5	65	36
37-45	6.6-8.0	66-80	45
46-60	8.2-10.7	82-107	60
61-70	10.9-12.5	109-125	70

Before using the appliance for the first time, you require:

- approx. 1 litre of water,
- approx. 1 kg dishwasher salt,
- domestic dishwasher detergent,
- rinse aid formulated for domestic dishwashers.

Every dishwasher is tested at the factory. There will be residual water in the appliance from this test. It is not an indication that it has been used previously.

Dishwasher salt

In order to achieve good cleaning results, the dishwasher needs to operate with soft water. Hard water results in a build-up of calcium deposits on crockery and in the dishwasher.
Mains water with a hardness level higher than 0.7 mmol/l (4 °dH - German scale) needs to be softened. This takes place automatically in the integrated water softener. The water softener in the dishwasher is suitable for a water hardness level of up to 12.6 mmol/l (70 °dH - German scale).

The water softener requires dishwasher salt.
Depending on the water hardness level (< 3.8 mmol/l, or 21 °dH - German scale), dishwasher salt is not required if combination tablets are being used (see “Operation, Detergent”).

If the water in your area is very soft and constantly **lower than 0.9 mmol/l (5 °dH - German scale)** you do **not** have to add dishwasher salt. The prompt to add salt will be switched off automatically if the water softener has been programmed for this to happen.

⚠ Dishwasher detergent will damage the water softener.
Do not fill the salt reservoir with powder or liquid detergent.

⚠ Only use special coarse grained dishwasher salt for reactivation.
Other salts may contain insoluble additives which can impair the functioning of the water softener.

Filling the salt reservoir

Important! Before filling the salt reservoir for the first time, you must fill it with approx. 1 litre of water to enable the salt to dissolve.

Once the dishwasher has been used, there is always sufficient water in the reservoir.

- Remove the lower basket and unscrew the salt reservoir cap.

Water or saline solution will run out of the reservoir when the cap is removed.

It should therefore only be removed in order to refill the salt reservoir.

- Fill the reservoir with approx. 1 litre of water (first use only).

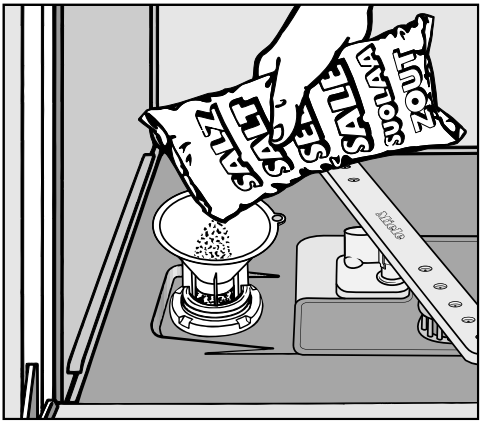

- Place the funnel provided over the salt reservoir and carefully fill with dishwasher salt until the reservoir is full. The salt reservoir holds approx. 1 kg of salt, depending on the type of salt used.
- Clean any excess salt from around the reservoir opening and then screw the cap on again firmly.
- Immediately after filling the salt container, run the *QuickPowerWash* programme with the *Short* option and without any load in the dishwasher to dissolve and remove any traces of salt from the cabinet.

Add salt reminder

- Fill the salt reservoir with dishwasher salt at the end of the programme if the *salt* indicator light comes on.

⚠ Danger of corrosion!
Immediately after filling the salt container, run the *QuickPowerWash* programme with the *Short* option and without any load in the dishwasher to dissolve and remove any traces of salt from the cabinet.

After the salt reservoir has been filled, the refill reminder may still appear in the display if the salt concentration has not yet reached the correct level. It will go out once the salt concentration has reached the correct level.

The refill reminder will be switched off if you have programmed the dishwasher for a water hardness below 0.9 mmol/l (5 °dH - German scale).

If you only ever use combination products in your dishwasher, you can switch both refill reminders for salt and rinse aid off if you wish (see “Programme options, Refill reminders”).

If you switch to using detergent that does not contain salt or rinse aid, it is important to remember to add salt and rinse aid and to switch the reminders back on.

Rinse aid

Rinse aid is necessary to ensure water does not cling and leave marks on crockery during the drying phase and helps crockery dry faster after it has been washed.
Rinse aid is poured into the storage reservoir and the amount set is dispensed automatically.

⚠ Inadvertently filling the rinse aid reservoir with washing-up liquid or powder or liquid detergent will damage the reservoir. Only pour rinse aid formulated for domestic dishwashers into the reservoir.

Alternatively, it is possible to use

- Household vinegar with a max. 5% acid content

or

- Liquid citric acid up to 10% acid content

The resulting rinsing and drying quality will not, however, be as good as when rinse aid is used.

⚠ Do not use vinegar with a higher acid content (e.g. vinegar essence 25% acid).
This would damage the dishwasher.

If you only ever use combination products containing rinse aid in your dishwasher, you do not need to add rinse aid.

Adding rinse aid

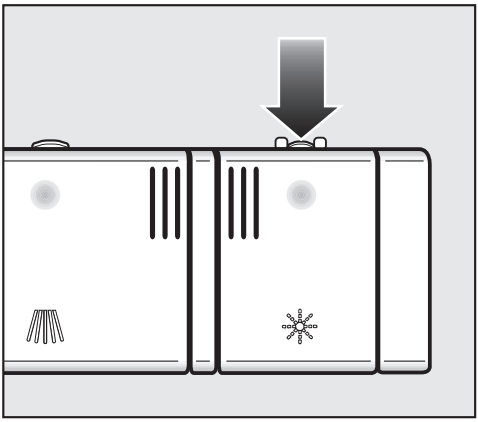

■ Press the button on the lid of the rinse aid reservoir in the direction of the arrow until the flap springs open.

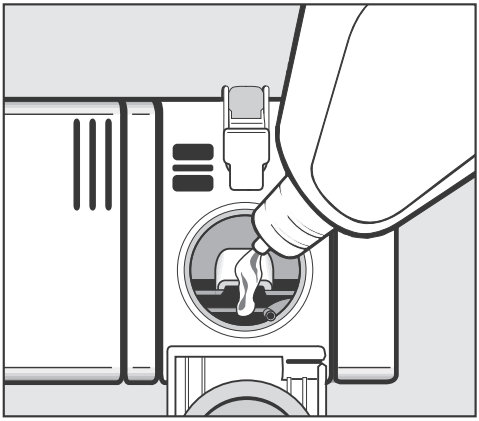

- Add rinse aid only until it is visible in the opening.

The rinse aid reservoir holds approx. 110 ml.

- Close the flap firmly so that it clicks into place. Otherwise water can enter the rinse aid reservoir during a programme.
- Wipe up any spilled rinse aid. This prevents over-foaming occurring during the next programme.

Rinse aid refill reminder

When the *Rinse aid* indicator lights up, the rinse aid reservoir contains sufficient rinse aid for 2 - 3 programmes only.

- Add rinse aid in plenty of time.

If you only ever use combination products in your dishwasher, you can switch both refill reminders for salt and rinse aid off if you wish (see “Programme options, Refill reminders”).

If you switch to using detergent that does not contain salt or rinse aid, it is important to remember to add salt and rinse aid and to switch the reminders back on.

Setting the rinse aid dosage

You can adjust the rinse aid dosage for best results.

The rinse aid dosage is set in stages from 0 to 6. It is set to 3 at the factory. This is the recommended setting.

The rinse aid dosage can turn out to be higher than the set value due to the automatic adjustment of the programme.

If spots appear on crockery and glassware:

- Increase the rinse aid dosage.

If clouding or smearing appears on crockery and glassware:

- Decrease the rinse aid dosage.

- Switch the dishwasher off with the ⏻ button, if it is switched on.
- Press the *Start* button in and **whilst holding it in** switch the dishwasher on using the ⏻ button.
  Keep the *Start* button pressed in for at least four seconds until the *Start* indicator light comes on.

If this does not happen, start the procedure from the beginning again.

- Press the ◷ button 3 times.

The ◷ indicator will flash rapidly three times at intervals.

The dosage set will show in the display after the *P* symbol.

The flashing sequence *P 3* will appear in the display.
This indicates the factory default setting 3.

- Use the *Start* button to select the setting required.
  Each press on the button moves you up a level. After reaching the highest value the counter starts from the beginning again.

The setting is now stored in memory.

- Switch the dishwasher off with the ⏻ button.

Notes

Remove coarse food residues from crockery.

There is no need to rinse items under running water.

⚠ Do not wash items soiled with ash, sand, wax, lubricating grease or paint in the dishwasher. These will damage to the dishwasher.

Crockery can be loaded anywhere in the baskets, but the following notes should be observed:

- Do not place crockery and cutlery inside other pieces where they may be concealed.
- Load the crockery so that water can access all surfaces. This ensures that they get properly cleaned.
- Make sure that all items are securely positioned.
- Hollow items such as cups, glasses, pans, etc. must be inverted in the basket.
- Tall, narrow, hollow items, e.g., champagne glasses, should be placed in the centre of the basket to ensure better water coverage.
- Wide based items should be placed at an angle so that water can run off them freely.
- The spray arms must not be blocked by items which are too tall or hang through the baskets. If in doubt, test for free movement by manually rotating the spray arms.
- Make sure that small items cannot fall through the holders in the baskets.
  Small items, e.g. lids, should therefore be placed in the cutlery tray or cutlery basket (depending on model).

Some foodstuffs may contain natural dyes, e.g. carrots, tomatoes or ketchup. Plastic items in the dishwasher may discolour if large quantities of these foodstuffs find their way into the dishwasher on the crockery. The stability of plastic items is not affected by this discolouration.
Cleaning silver cutlery in the dishwasher may also cause plastic items to discolour.

Items not suitable for dishwashers:

- Wooden cutlery and crockery or items with wooden parts: these may discolour and fade. The glue used in these items is not dishwasher-proof and wooden handles may come loose after being washed in a dishwasher.
- Craft items, antiques, valuable vases and decorative glassware: such items are not suitable for dishwashers.
- Plastic items which are not heat resistant: the high temperatures in the dishwasher may cause them to melt or lose shape.
- Copper, brass, tin and aluminium items: these may discolour or become matt.
- Colours painted over a glaze: these may fade after a number of washes.
- Delicate glassware and glassware containing lead crystal: clouding may occur over time.

Please note

Silverware previously cleaned with a **silver polish** may still be damp or spotted at the end of a programme, where water has not run off smoothly. It may need to be rubbed dry with a soft cloth.

Silver which has been in contact with foods containing sulphur can discolour. These include egg yolk, onions, mayonnaise, mustard, pulses, fish, fish brine and marinades.

⚠ Aluminium components (e.g. cooker hood grease filters) must not be cleaned with caustic alkaline commercial or industrial cleaning agents.
These may damage the material, or in extreme cases, there is a risk of a severe explosive chemical reaction (such as an explosive oxyhydrogen gas reaction).

Tip: When purchasing new crockery and cutlery, make sure they are dishwasher-proof.

Glass care

- Clouding may occur on glasses after frequent washing. If delicate glassware is washed in the dishwasher ensure that only very low temperatures are used (see programme chart), or a special glass-care programme is used (depending on model). This will reduce the risk of clouding.
- Purchase glassware which is dishwasher safe (e.g. Riedel glassware).
- Use detergents with glass protective additives.

FlexAssist

The yellow coded FlexAssist parts indicate which elements of the dishwasher baskets and cutlery tray are moveable. They also act as grips and have symbols embossed on them to show what the moveable parts are used for.

Upper basket

See “Loading the dishwasher, Loading examples” for examples of how to load crockery and cutlery.

⚠ For safety reasons, do not operate the dishwasher without the upper and lower baskets in place.

- Use the upper basket for small, lightweight and delicate items such as cups, saucers, glasses, dessert bowls, etc.
  Shallow pans or casserole dishes can also be placed in the upper basket.

Cup rack

- Raise the rack upwards using the yellow lever to make room for tall items.

Glasses can be arranged along the cup rack for support during the programme.

- Lower the cup rack and lean the glasses against it.

Adjusting the upper basket

In order to gain more space for taller pieces of crockery in the lower or upper basket, the upper basket can be adjusted on three levels with 2 cm between each level.

The upper basket can also be set at an angle with one side high and the other side low. This can be useful to help prevent water being left in deep dishes etc. Ensure, however, that the basket can be inserted smoothly into the cabinet. It is better to adjust the basket before loading it.

- Pull out the upper basket.

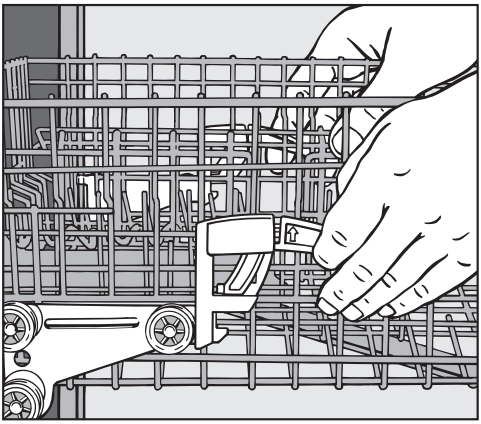

To raise the upper basket:

- Lift the basket up until it clicks into place.

To lower the upper basket:

- Pull upwards on the levers at either side of the upper basket.
- Adjust the basket to the desired height and then push the levers securely back down into position.

Depending on the setting of the upper basket, the following plate dimensions can be accommodated.

Dishwashers with cutlery tray

Upper basket level	Plate ∅ in cm	
	Upper basket	Lower basket
Top	15	31
Middle	17	29
Bottom	19	27

Lower basket

See “Loading the dishwasher, Loading examples” for examples of how to load crockery and cutlery.

- Use the lower basket for larger and heavier items such as plates, serving platters, saucepans, serving dishes, etc.
  Glasses, cups and small items such as saucers can also be placed in the lower basket.

Hinged spikes

Both rows of spikes at the front can be lowered to make more room for large items, e.g. pots, pans and serving dishes.

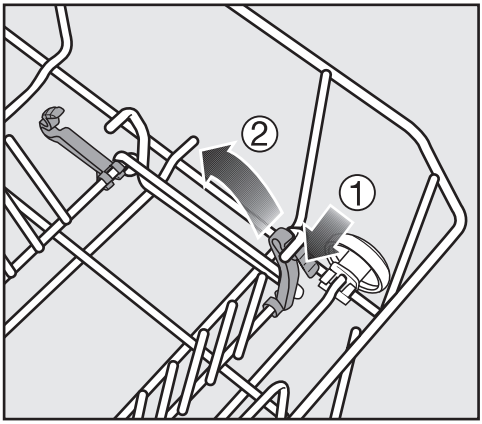

- Press the yellow lever downwards ①, and then lower the spikes ②.

Removable spiked insert

For plates, bowls, pans, etc.

The spiked insert at the back can be removed to make more room for larger items such as shallow pans and casserole dishes.

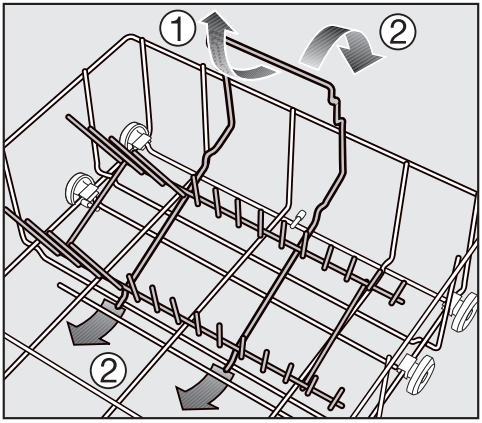

To remove the insert ①

- Pull it upwards by the handle as shown.

To replace the insert ②

- Fit the insert into the lower basket with the hooks going under the long cross-piece as illustrated.
- Press down on the handle until the insert is held securely in position.

Bottle holder (depending on model)

The bottle holder can be used to wash narrow items, e.g. milk and baby bottles.

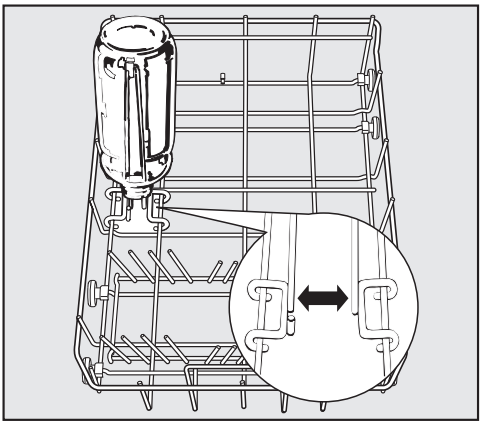

- Place the bottle holder in the position shown in the bottom basket.
  If placed anywhere else, water will not be able to access the bottle properly, and cleaning results will be impaired.

Cutlery

Cutlery tray

See “Loading the dishwasher, Loading examples” for examples of how to load crockery and cutlery.

- Arrange the cutlery in the tray as shown.

To make unloading easier, cutlery should be grouped in zones, one for knives, one for forks, one for spoons, etc.

Spoon heads should be placed in contact with at least one of the serrated retainers on the base of the cutlery tray to ensure that water runs off them freely.

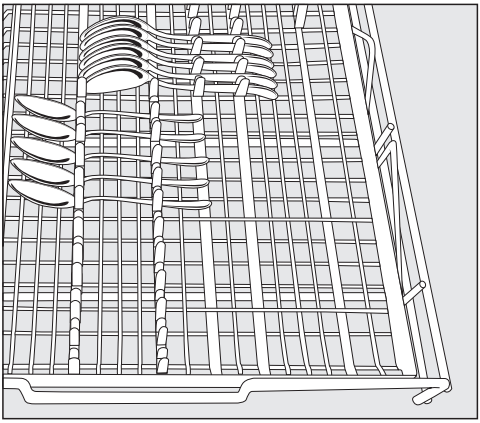

For optimum cleaning results arrange spoons with the inner part facing the centre of the cutlery tray.

The upper spray arm must not be blocked by items which are too big (e.g. cake slices).

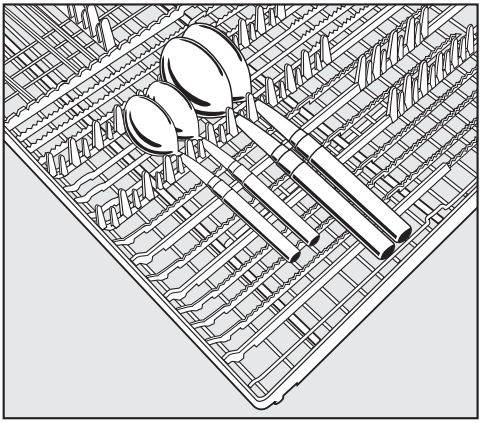

- If spoon handles do not fit between the holders, then lay them the other way round.

Loading examples

Dishwashers with cutlery tray

Upper basket

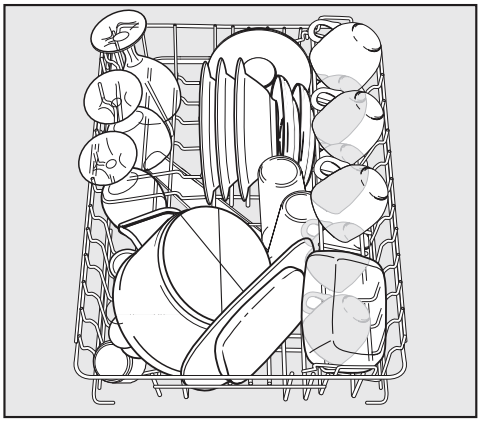

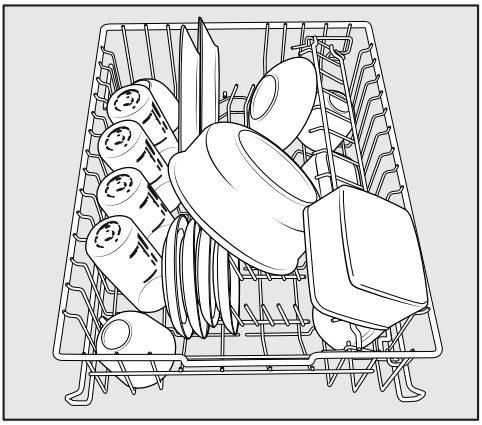

Lower basket

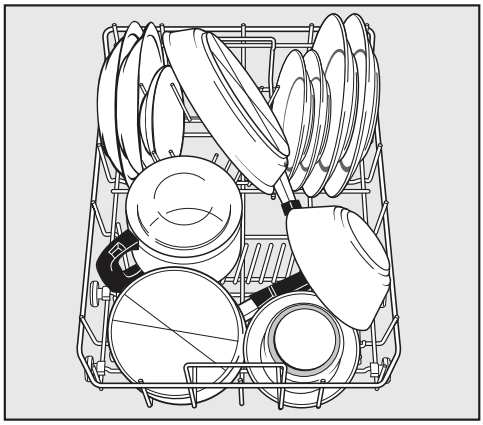

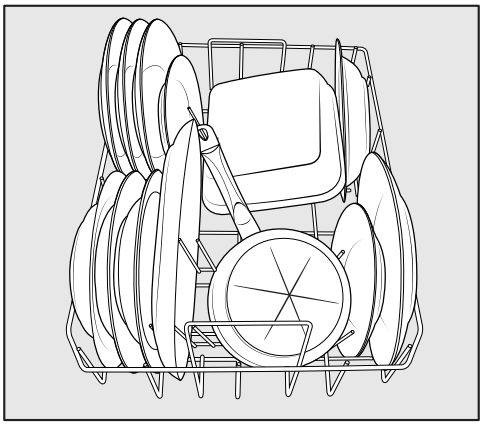

Cutlery tray

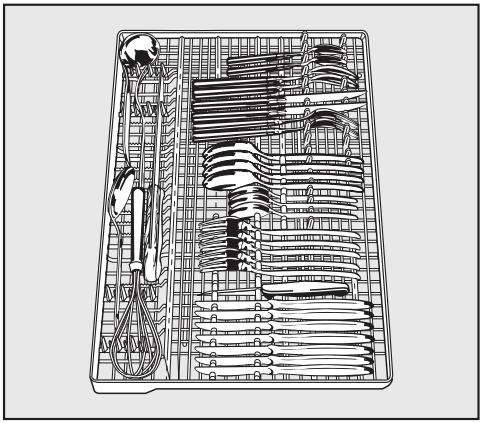

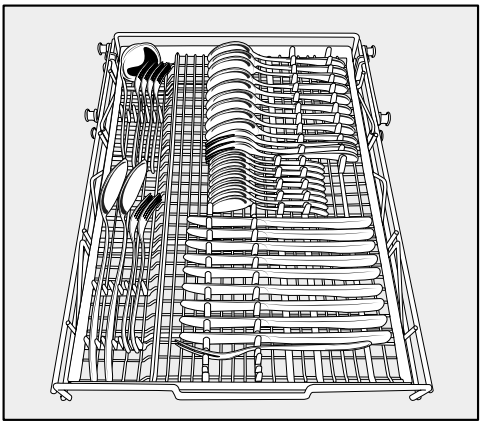

Heavily soiled items

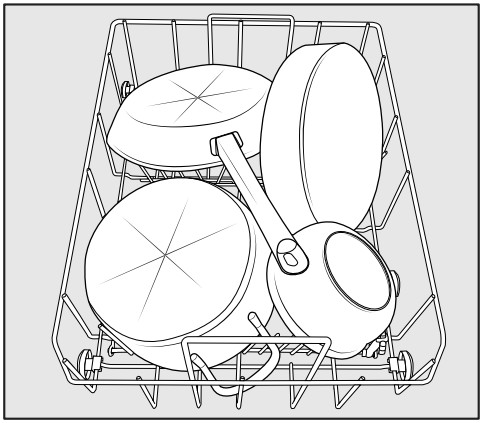

Detergent

⚠ Only use detergents formulated for domestic dishwashers. Do not use washing-up liquid.

Active ingredients

Modern detergents contain various active ingredients, the most important of which are:

- Complexing agents to prevent calcification.
- Alkalis to aid removal of dried on soiling.
- Enzymes to break down starch and loosen protein.
- Oxygen based bleaching agents to remove coloured stains (e.g. tea, coffee, tomato sauce).

Most dishwasher detergents are mildly alkaline and contain enzymes and oxygen based bleaching agents.

Types of detergent:

- Powder and liquid gel detergents. These detergents allow you to adjust the amount dispensed according to the size of the load and level of soiling.
- Tab detergents. These are suitable for most levels of soiling.

You can also buy combination products (see “Programme options, DetergentAgent”, if applicable).
In addition to detergent, these products contain rinse aid and salt substitutes. They are available as “3 in 1” or when they also contain other components such as glass and stainless steel protective additives and enhanced cleaning power, as “5 in 1”, “7 in 1”, “All in 1” etc. Refer to the manufacturer's packaging as to whether combination products are suitable for the water hardness level in your area.
Please note that the cleaning and drying results of combination detergents can vary greatly.

For optimum cleaning and drying results, use Miele dishwasher detergent and add Miele salt and Miele rinse aid separately. See “Optional accessories”.

Detergent dosage

- Follow the dosage recommended by the manufacturer on the packaging.
- Unless directed otherwise, use one detergent tab or add 20 to 30 ml detergent to compartment II, depending on the level of soiling. With very heavy soiling you can also add a small amount of detergent to compartment I.
- Tabs may not dissolve completely when the QuickPowerWash programme (if available) is used.

Failure to dispense the recommended amount of detergent may impair cleaning results.

⚠ Dishwasher detergents can cause burning in the nose, mouth and throat if swallowed, or inhibit breathing.

Avoid inhalation of powder detergents and do not ingest dishwasher detergent. Seek medical attention immediately if detergent has been swallowed or inhaled.

Keep detergent out of the reach of children at all times. Keep children away from the dishwasher when the door is open. There could still be detergent residues in the cabinet. Only add detergent just before starting the programme and close the door, activating the safety lock (if your dishwasher is fitted with one).

Adding detergent

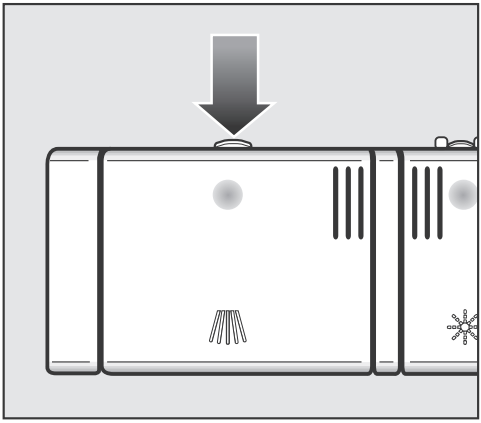

- Press the opening catch on the detergent dispenser. The flap will spring open.

The flap is always open at the end of a programme.

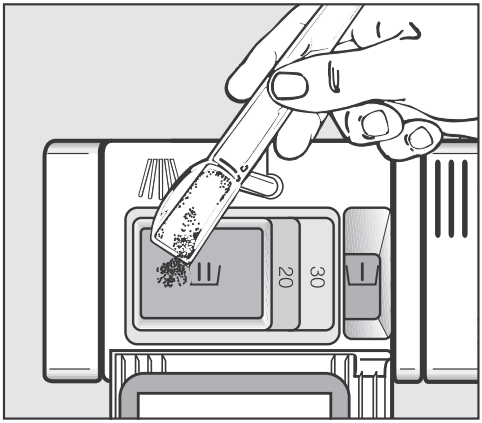

- Add the required amount of detergent and close the flap.
- Make sure that the detergent packaging is properly closed after use to avoid it getting damp and clumping together.

For information

Compartment I holds max. 10 ml, Compartment II holds max. 50 ml of detergent.

There are marks in compartment II to assist with dispensing: 20, 30. The marks indicate a level of approx. 20 or 30 ml when the door is open in a horizontal position.

Switching on

- Make sure the spray arms can rotate freely.
- Close the door.
- Open the stopcock, if it is closed.
- Switch the dishwasher on with the ⏻ button.

The *Start* indicator light flashes and the indicator light comes on next to the programme selected.

Switch the Memory function on (see “Programme options, Memory”) if you want the last programme selected to remain selected instead of the *ECO* programme.

Selecting a programme

Choose your programme according to the type of load and how dirty it is.

The different programmes and their uses are described in the **Programme chart** later on in this booklet.

- Use the programme selector button ∨ to select the programme required.

The indicator light for the programme selected will light up.
The programme duration will appear in hours and minutes in the display.

You can now select programme options (see “Programme options”).

If any programme options are selected, the appropriate indicator lights will also light up.

Starting a programme

■ Press the *Start* button.

The programme will begin.

The *Start* indicator light will come on.

A programme should only be cancelled in the first few minutes, if at all. Otherwise important programme stages could be omitted.

Time display

The duration of the programme selected appears in hours and minutes in the display before the programme begins. During the programme the time left until the end of the programme is displayed.

The programme duration displayed may vary with the same programme. It is influenced by, among other things, the water temperature at each intake, the reactivation process, the water softening unit, the type of detergent, the amount of crockery and how dirty it is.

When a programme is selected for the first time, the display will show the average programme duration for a cold water intake.

The durations shown in the Programme chart refer to standard test loads and temperatures.

Each time a programme is run, the electronic unit calculates the programme duration required according to the temperature of the water taken into the dishwasher and the amount of crockery.

Energy management

To save energy, the dishwasher will switch off automatically 10 minutes after the last time a button has been pressed or 10 minutes after the end of the programme (see “Programme options, Optimise standby”).

- Press the ⏻ button to switch the dishwasher back on.

The dishwasher will not switch off whilst a programme is running, during the Delay start period or if there is a fault.

At the end of the programme

The programme has ended when 0.00 shows in the display.

The drying fan may continue to run for a few minutes at the end of the programme.

- The dishwasher can now be opened and unloaded.

⚠ To prevent the risk of steam damage to the worktop edging above the dishwasher, it is advisable to leave the door closed until you are ready to unload the crockery. Alternatively you can open the door fully until the crockery is cool enough to unload. Do not leave the door only partially open.

Switching off

At the end of a programme:

- The dishwasher can be switched off at any time using the ⏻ button.

Switching the dishwasher off during a programme stops the programme.

Switching the dishwasher off during the run-up to a delay start time (FlexiTimer) will also stop the process.

If the dishwasher is not going to be used for a longer period of time, e.g. whilst on holiday, the stopcock should be closed.

Unloading the dishwasher

Dishes tend to break and chip more easily when they are hot. Allow the dishes to cool until they are comfortable enough to handle before unloading them.

If you open the door fully after switching off, the dishes will cool much faster.

First unload the lower basket, then the upper basket and finally the cutlery tray (depending on model).
This will prevent water drops from the upper basket and cutlery tray from falling onto the dishes in the lower basket.

Interrupting a programme

A programme is interrupted as soon as the door is opened.
If the door is closed again, the programme will continue from the point it was at before the door was opened.

⚠ Water in the dishwasher may be hot. Danger of scalding.

Only open the door if absolutely necessary and exercise extreme caution when doing so. Before closing the door again, leave it ajar for approx. 20 seconds. This will enable the temperature in the wash cabinet to settle. Then raise the door up and push until the catch engages.

Changing a programme

If the detergent dispenser flap has already opened, do not change the programme.

If a programme has already started and you wish to change it, proceed as follows:

- Switch the dishwasher off with the ⏻ button.
- Switch the dishwasher on again with the ⏻ button.
- Select the programme you want, and then start it.

Short

The Short option reduces the duration of programmes in which this option is available (see “Programme chart”).

In order to achieve optimum cleaning results consumption rates are increased with this option.

When used in combination with the *QuickPowerWash* programme, the Short option results in a wash programme designed solely for the purpose of flushing saline solution out of the cabinet after refilling the salt reservoir.

- Switch the dishwasher on with the ⏻ button.

The *Start* indicator light will flash.

- Select a programme.
- Press the button.

The indicator will light up.

- You can now start a programme.

The option selected will remain active for that particular programme until the setting is changed.

DetergentAgent

For optimum cleaning results, the dishwasher automatically adjusts the programme sequence to the type of detergent being used. Depending on the programme, this can mean that the running time and energy consumption vary slightly.

Refill reminders

If you only ever use combination products in your dishwasher, you can switch the refill reminders for salt and rinse aid off if you wish. Doing so will not affect the DetergentAgent function.

- Switch the dishwasher off with the ⏻ button, if it is switched on.
- Press the *Start* button in and **whilst holding it in** switch the dishwasher on using the ⏻ button.
  Keep the *Start* button pressed in for at least four seconds until the *Start* indicator light comes on.

If this does not happen, start the procedure from the beginning again.

- Press the ◷ button nine times.

The ◷ indicator will flash rapidly nine times at intervals.

The flashing sequence in the display indicates whether the refill indicators have been activated or not.

- *P 1*: Refill indicators activated
- *P 0*: Refill indicators deactivated

- Press the *Start* button to change the setting.

The setting is now stored in memory.

- Switch the dishwasher off with the ⏻ button.

If you switch to using detergent that does not contain salt or rinse aid, it is important to remember to add salt and rinse aid and to switch the reminders back on.

Delay start

You can set the start time for a programme, e.g. to take advantage of night time electricity tariffs. The start time can be delayed between 30 minutes and 24 hours.
The delay period is shown in 30 minutes increments for a delay period between 30 minutes and 9 hours 30 minutes. It is shown in hours for periods longer than this.

When using the Delay start function, make sure that the detergent compartment is dry before adding detergent. Wipe dry with a cloth if necessary. If the compartment is wet, powder detergent can become lumpy and stick to the dispenser, with the result that it is not fully dispensed.
Do not use liquid detergent when selecting Delay start, as it can run into the dishwasher before it is required.

⚠ To prevent children coming into contact with dishwasher detergent: add the detergent **immediately before** starting the programme, i.e. before activating Delay start with the *Start* button. Then lock the door with the safety lock.

- Switch the dishwasher on with the ⏻ button.

The *Start* indicator light will flash.

- Select the programme you want.
- Press the ◷ button.

The last Delay start time used will appear in the display. The ◷ indicator light will come on.

- Set the required time using the ◷ button.

If you keep the ◷ button pressed in, the time will increase automatically up to 24 hours. To get back to 0.30 hours, press the ◷ button twice.

- Press the *Start* button.

The *Start* indicator light will come on.

If optimise standby is switched on (see “Programme options, Optimise standby”) the display will go out after a few minutes, leaving just the *Start* indicator flashing slowly.

Press any button to switch the display back on again for a few minutes.

The time up until the programme starts will show counting down in the display in hours for durations above 10 hours, and in minutes for durations below this.

When the set time is reached, the programme selected will start automatically. The time remaining will appear in the display and the ◷ indicator light will go out.

How the Delay start time is shown in the display:

up to 59 minutes:
e.g. 30 minutes = *0.30*

1 hour up to 9 hours 30 minutes:
e.g. 5 hours = *5.00*

over 10 hours:
e.g. 15 hours = *15*

Starting a programme before the Delay start period has elapsed:

A programme can be started before the Delay start period has elapsed.
Proceed as follows:

- Switch the dishwasher off with the ⏻ button.
- Switch the dishwasher on again with the ⏻ button.
- Select the programme you want.
- Press the *Start* button.

The programme will begin and the *Start* indicator light will light up.

Adjust Automatic

You can adjust the *Automatic* programme so that it will remove stubborn soiling from a lightly soiled load. This will increase energy usage.

- Switch the dishwasher off with the ⏻ button, if it is switched on.
- Press the *Start* button in and **whilst holding it in** switch the dishwasher on using the ⏻ button.
  Keep the *Start* button pressed in for at least four seconds until the *Start* indicator light comes on.

If this does not happen, start the procedure from the beginning again.

- Press the ◷ button five times.

The ◷ indicator will flash rapidly five times at intervals.

The flashing sequence in the display indicates whether Adjust Automatic is activated or not.

- *P 1*: “Adjust Automatic” activated
- *P 0*: “Adjust Automatic” deactivated

- Press the *Start* button to change the setting.

The setting is now stored in memory.

- Switch the dishwasher off with the ⏻ button.

Memory

You can use the “Memory” option to save the last programme used.
Instead of the *ECO* programme, the last programme used will be selected when the dishwasher is switched off and back on again or the door is opened and then closed at the end of a programme.

- Switch the dishwasher off with the ⏻ button, if it is switched on.
- Press the *Start* button in and **whilst holding it in** switch the dishwasher on using the ⏻ button.
  Keep the *Start* button pressed in for at least four seconds until the *Start* indicator light comes on.

If this does not happen, start the procedure from the beginning again.

- Press the ◷ button six times.

The ◷ indicator will flash rapidly six times at intervals.

The flashing sequence in the display indicates whether the “Memory” function is activated or not.

- *P 1*: “Memory” activated
- *P 0*: “Memory” deactivated

- Press the *Start* button to change the setting.

The setting is now stored in memory.

- Switch the dishwasher off with the ⏻ button.

Optimise standby

“Optimise standby” is activated by default.

To save energy the dishwasher will switch off automatically a few minutes after the last time a button has been pressed or after the end of a programme.

The dishwasher will not switch off whilst a programme is running, during the Delay start period or if there is a fault.

Optimise standby can be switched off if you prefer. If you do this the duration before the dishwasher switches off automatically increases to approx. 6 hours. Doing this will increase energy consumption.

- Switch the dishwasher off with the ⏻ button, if it is switched on.
- Press the *Start* button in and **whilst holding it in** switch the dishwasher on using the ⏻ button.
  Keep the *Start* button pressed in for at least four seconds until the *Start* indicator light comes on.

If this does not happen, start the procedure from the beginning again.

- Press the ◷ button eight times.

The ◷ indicator will flash rapidly eight times at intervals.

The flashing sequence in the display shows whether Optimise standby is activated or not.

- *P 1*: “Optimise standby” activated
- *P 0*: “Optimise standby” deactivated

- Press the *Start* button to change the setting.

The setting is now stored in memory.

- Switch the dishwasher off with the ⏻ button.

Factory default

If you have altered any settings from the factory default, you can re-set them back to the factory default settings.

- Switch the dishwasher off with the ⏻ button, if it is switched on.
- Press the *Start* button in and **whilst holding it in** switch the dishwasher on using the ⏻ button.
  Keep the *Start* button pressed in for at least four seconds until the *Start* indicator light comes on.

If this does not happen, start the procedure from the beginning again.

- Press the ◷ button 19 times.

The ◷ indicator will flash once slowly and then rapidly nine times at intervals.

The flashing sequence in the display indicates whether a setting has been changed from its factory default.

- *P 1*: All settings are set to factory default settings.
- *P 0*: At least one setting has been changed.

- To reset the dishwasher to the factory default settings, press the *Start* button.

The setting is now stored in memory.

- Switch the dishwasher off with the ⏻ button.

Programme chart

Programme	Programme sequence				
	Pre-wash	Main wash °C	Interim rinse	Final rinse °C	Drying
ECO [1]		44	X	61	X
Automatic	Variable programme sequence, sensor-controlled adjustment according to the amount of crockery and level of food deposits				
	If required	45-65	If required	62-70	X
Intensive 75 °C	2X	75	X	68	X
QuickPowerWash		65	X	65	X
Gentle	X	45	X	68	X
Normal 55 °C	X	55	X	68	X

[1] This programme is the most efficient in terms of its combined energy and water consumption for cleaning normally soiled crockery.

Consumption [2]			Duration [2]	
Energy		Water		
Cold water 15 °C kWh	Hot water 55 °C kWh	Litres	Cold water 15 °C h:min	Hot water 55 °C h:min
0.78	0.52	8.7	3:15	3:08
0.75 [3] -1.10 [4]	0.50 [3] -0.70 [4]	6.0 [3] -13.5 [4]	1:45-3:04	1:36-2:52
1.30	0.90	13.5	3:04	2:57
1.05	0.70	10.5	0:58	0:58
0.90	0.55	12.0	2:11	2:00
1.00	0.65	12.0	2:20	2:10

[2] Values quoted are in accordance with EN 50242. In practice there may be variations to these figures due to variable conditions and data recorded by the sensors. Durations shown will reflect your household conditions.

Selecting programme options will also affect consumption levels and programme durations (see “Programme options”).

[3] Part load with light soiling

[4] Full load with heavy soiling

Programme chart

Crockery	Food deposits	Programme features
Mixed, everyday crockery	All normal food deposits	Variable, sensor-controlled programme Short programme
		Programme duration less than 1 hour [3]
Heat-sensitive glasses and plastic	Fresh, easily removed food deposits	Gentle programme with glass care Short programme
Mixed crockery	Normal, lightly dried-on food residues	Water and energy saving programme Short programme
Pots, pans, everyday crockery and cutlery		Programme for everyday use Short programme
	Burnt-on, stubborn, dried-on food deposits containing starch or protein 1)	Maximum cleaning power Short programme
No crockery	Residual salt after refilling the salt container	Flushes out salt residues

[1] Food such as potatoes, pasta, rice or stews can leave starchy deposits. Deposits containing protein can be left by food such as meat, fish or eggs and bakes.

Programme	Detergent	
	Compartment I [2]	Compartment II [2]
Automatic / **+short**	-	25 ml or 1 tab
QuickPowerWash	-	1 tab [3]
Gentle / **+short**	-	20 ml or 1 tab
ECO / **+short**	-	25 ml or 1 tab
Normal 55 °C [4] / **+short**	-	25 ml or 1 tab
Intensive 75 °C / **+short**	10 ml	25 ml or 1 tab
QuickPowerWash +short	-	-

[2] see “Detergent”
[3] best cleaning results are only achieved using Miele's quick dissolving UltraTab Multi
[4] in “further ” (depending on model)

Check your dishwasher regularly (approx. every 4 - 6 months). This way faults and problems can be avoided.

⚠ The external surfaces of the dishwasher are susceptible to scratching.
Contact with unsuitable cleaning agents can alter or discolour the external surfaces.

Cleaning the wash cabinet

The wash cabinet is largely self-cleaning, provided that the correct amount of detergent is always used.

If, however, there are limescale or grease deposits in the cabinet, these can be removed with a special cleaning agent (available from Miele). Follow the instructions on the packaging.

If you mainly use low temperature programmes (below 50 °C), there is a risk of bacteria and unpleasant odours building up in the wash cabinet. To prevent this happening the dishwasher will automatically increase the temperature in the final rinse of the selected programme after several programmes using low temperatures have been run.

- Clean the filters in the wash cabinet regularly.

Cleaning the door and the door seal

Mould could build up on the door seal and the sides of the dishwasher door as these surfaces are outside the wash cabinet and so not accessed and cleaned by the spray arm jets.

- Wipe the door seal regularly with a damp cloth to remove food deposits.
- Wipe off any food or drink residues which may have dripped onto the sides of dishwasher door before closing it.

Cleaning the door front

⚠ Soiling that is left too long might become impossible to remove and could cause the external surfaces to alter or discolour.
Remove any soiling immediately.

- Clean the front with a clean sponge and a solution of hot water and washing-up liquid. After cleaning dry with a soft cloth.
  A clean, damp microfibre cloth without cleaning agent can also be used.

To avoid damaging the external surfaces, do not use:

- cleaning agents containing soda, ammonia, acids or chlorides,
- cleaning agents containing descaling agents,
- abrasive cleaning agents, e.g. powder cleaners and cream cleaners,
- solvent-based cleaning agents,
- stainless steel cleaning agents,
- dishwasher cleaner,
- oven sprays,
- glass cleaning agents,
- hard, abrasive brushes or sponges, e.g. pot scourers, brushes or sponges which have been previously used with abrasive cleaning agents,
- melamine eraser blocks,
- sharp metal scrapers,
- wire wool,
- steam cleaning appliances.

Checking the filters in the wash cabinet

The filter combination in the base of the wash cabinet retains coarse soil from the suds solution, preventing it accessing the circulation system and re-entering the cabinet through the spray arms.

⚠ This dishwasher must not be used without all the filters in place.

Collection of coarse soil may cause the filters to clog. The level of soiling and time it takes before the filters need cleaning will vary depending on use.

- Check the condition of the filters regularly and clean them if necessary.

Cleaning the filters

- Switch the dishwasher off.

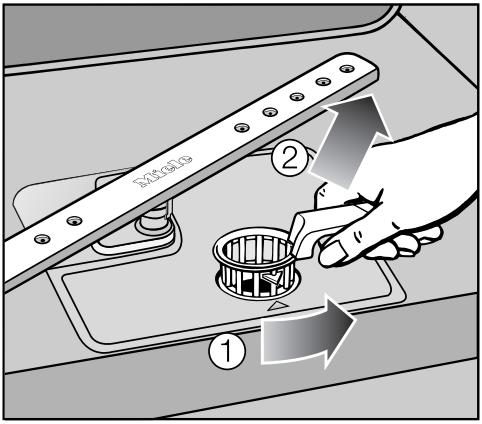

- Turn the handle anti-clockwise to release the filter combination ①.
- Lift the filter combination out of the dishwasher ②. Remove any coarse particles and rinse the filter well under running water.
  Use a nylon brush if necessary.

⚠ Make sure that when cleaning the filters, no coarse soil falls into the circulation system, causing a blockage.

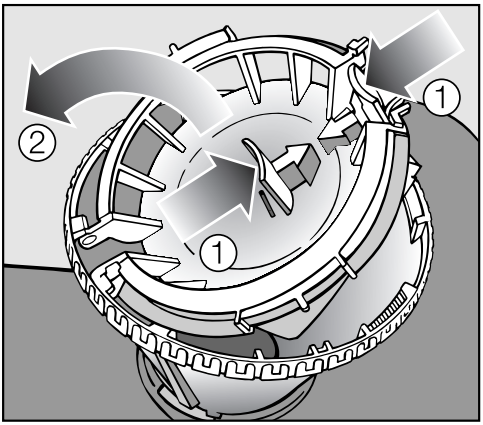

To clean the inside of the filter, the flap must be opened:

- Press catches ① together in the direction of the arrows as shown, and open the filter ②.
- Rinse all the filters under running water.
- Then close the flap so that the catch engages.

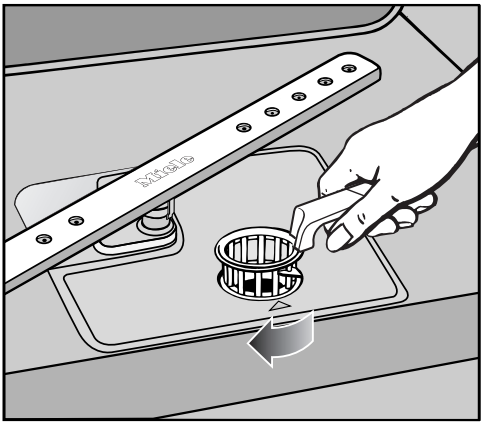

- Replace the filter combination so that it lies flat in the base of the wash cabinet.
- Then turn the handle clockwise to lock the filter combination in place.

⚠ Take care when you are fitting the filter combination that it is secured in position correctly.
Otherwise coarse soil could get into the circulation system and cause a blockage.

Cleaning the spray arms

Particles of food can get stuck in the spray arm jets and bearings. The spray arms should therefore be inspected and cleaned regularly (approx. every 4 - 6 months).

- Switch the dishwasher off.

Remove the spray arms as follows:

- Take out the cutlery tray (if your dishwasher is fitted with one).
- Push the **top** spray arm upwards to engage the inner ratchet. Then unscrew the spray arm.

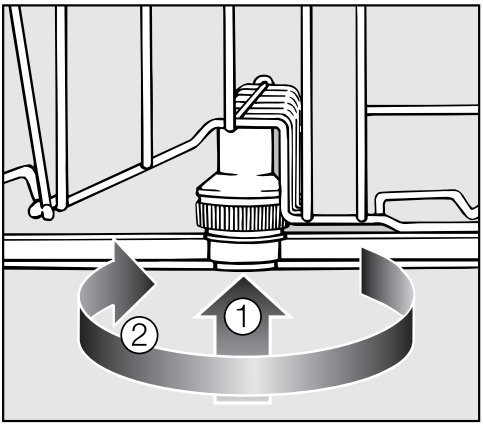

- Push the **middle** spray arm upwards ① to engage the ratchet. Then unscrew the spray arm ②.
- Remove the lower basket.

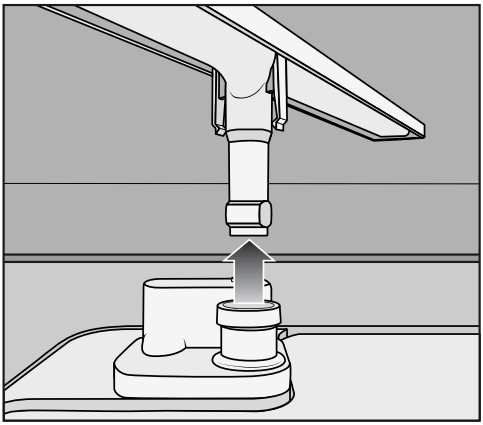

- Pull the **lower** spray arm firmly upwards to remove it.

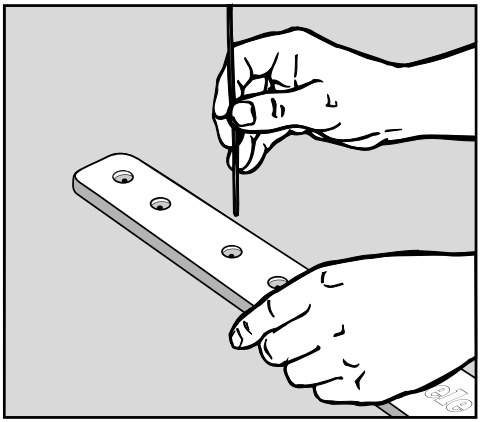

- Use a pointed object to push food particles into the spray arm jets.
- Rinse thoroughly under running water.
- Replace the spray arms and check that they rotate freely.

Most minor faults in the performance of the appliance, some of which may result from incorrect operation, can be put right without contacting the Service Department.

The following guide may help you to find the reason for a fault, and to correct it. You should, however, note the following:

⚠ Unauthorised or incorrect repairs could cause personal injury or damage to the appliance.
Repair work to electrical appliances must only be carried out by a suitably qualified and trained person in strict accordance with current local and national safety regulations. The manufacturer cannot be held liable for unauthorised work.

Technical problems

Problem	Cause and remedy
The *Start* indicator does not flash after switching the dishwasher on with the ⏻ button.	The dishwasher is not plugged in, or connected to the mains. ■ Plug the dishwasher in and connect it to the mains supply.
	The mains fuse has tripped. ■ Reset the trip switch in the mains fuse box or replace the fuse in the plug (minimum fuse rating - see data plate).
The dishwasher stops during a programme.	The mains fuse has tripped. ■ Reset the trip switch in the mains fuse box or replace the fuse in the plug (minimum fuse rating - see data plate). ■ If the mains fuse trips again, call the Miele Service Department.

Problem	Cause and remedy
The *Inlet*/*Drain* and *Rinse aid* indicators are flashing at the same time. **Fault number *FXX* is showing in the display.**	There may be a technical fault. ■ Switch the dishwasher off with the ⏻ button. ■ Switch the dishwasher back on after a few seconds. ■ Select the programme you want. ■ Press the *Start* button. If the indicator lights flash again, there is a technical fault. ■ Call the Miele Service Department.
Fault *F70*: **The drain pump is still running, even with the door open.**	The Waterproof system has reacted. ■ Close the stopcock. ■ Call the Miele Service Department.
Fault *F78*:	A fault has occurred in the circulation pump. ■ Switch the dishwasher off for at least 30 seconds with the ⏻ button. ■ Switch the dishwasher back on. If the fault message appears again, there is a technical fault. ■ Call the Miele Service Department.

Water inlet fault

Problem	Cause and remedy
The *Inlet/Drain* indicator flashes on and off.	The stopcock is closed. ■ Open the stopcock fully.
The dishwasher stops during a programme. The *Inlet/Drain* indicator flashes. Fault code F12 or F13 appears in the display.	Before rectifying the problem: ■ Switch the dishwasher off with the ⏻ button.
	The water intake is restricted. ■ Open the stopcock fully and start the programme again. ■ Clean the water inlet filter (see “Maintenance”). ■ The water pressure at the intake is lower than 50 kPa (0.5 bar). Seek professional advice.

Water drainage fault

Problem	Cause and remedy
The dishwasher stops during a programme. The *Inlet/Drain* indicator flashes. Fault code F11 shows in the display.	Before rectifying the problem: ■ Switch the dishwasher off with the ⏻ button.
	The water outlet is restricted. There might be water in the wash cabinet. ■ Clean the filter combination (see “Cleaning and care, Cleaning the filters”). ■ Clean the drain pump (see “Maintenance”). ■ Clean the non-return valve (see “Maintenance”). ■ Remove any kink or loop in the drain hose.

General problems

Problem	Cause and remedy
The indicator lights and display are dark.	The display has switched off automatically to save energy. ■ Switch the dishwasher on again with the ⏻ button.
Detergent residue is left in the dispenser at the end of a programme.	The dispenser was still damp when detergent was added. ■ Make sure the dispenser is dry before adding detergent.
The detergent dispenser lid cannot be closed properly.	Clogged detergent residue is blocking the catch. ■ Clean the detergent from the catch.
At the end of a programme there is a film of moisture on the inside of the door and the interior cabinet walls.	This is caused by the drying system and does not indicate a fault. The moisture will dissipate after a while.
Water remains in the wash cabinet at the end of a programme.	Before rectifying the problem: ■ Switch the dishwasher off with the ⏻ button.
	The filter combination in the wash cabinet is clogged. ■ Clean the filter combination (see “Cleaning and care, Cleaning the filters”).
	The drain pump or non-return valve may be blocked. ■ Clean the drain pump or the non-return valve (see “Maintenance”).
	The drain hose is kinked. ■ Remove any kink from the drain hose.

Noises

Problem	Cause and remedy
Knocking noise in the wash cabinet.	A spray arm is knocking against an item in a basket. ■ Interrupt the programme, and rearrange the items which are obstructing the spray arm.
Rattling noise in the wash cabinet.	Items of crockery are insecure in the wash cabinet. ■ Interrupt the programme, and rearrange the items of crockery.
	A foreign object (e.g. a cherry stone) has become lodged in the drain pump. ■ Remove the foreign object from the drain pump (see “Maintenance, Cleaning the drain pump and non-return valve”).
Knocking noise in the water pipes.	This may be caused by the on-site installation or the cross-section of the piping. ■ This has no influence on dishwasher function. If in doubt, contact a suitably qualified plumber.

Unsatisfactory washing result

Problem	Cause and remedy
The dishes are not clean.	The dishes were not loaded correctly. ■ See notes in “Loading the dishwasher”.
	The programme was not powerful enough. ■ Select a more powerful programme (see “Programme chart”).
	There is some stubborn soiling although most of the crockery is only lightly soiled (e.g. with tea stains). ■ Select the “Adjust Automatic” programme option (see “Programme options”).
	Not enough detergent was dispensed. ■ Use more detergent, or change your detergent.
	Items are blocking the path of the spray arms. ■ Rearrange the items so that the spray arms can rotate freely.
	The filter combination in the base of the wash cabinet is not clean or is not correctly fitted. This may cause the spray arm jets to get blocked. ■ Clean and/or fit the filter combination correctly. ■ Clean the spray arm jets, if necessary (see “Cleaning and care, Cleaning the spray arms”).
	The non-return valve is open and blocked. Dirty water has flowed back into the wash cabinet. ■ Clean the drain pump and the non-return valve (see “Maintenance”).
Smearing appears on glassware and cutlery. There is a bluish sheen on the surface of glassware; film can be wiped off.	The rinse aid dosage is set too high. ■ Reduce the dosage. See “Before using for the first time, Rinse aid”.

Problem	Cause and remedy
Crockery is not dry or cutlery and glasses are flecked.	The rinse aid dosage is set too low or the rinse aid reservoir is empty. ■ Replenish the reservoir, increase the dosage or change the brand of rinse aid (see “Before using for the first time, Rinse aid”).
	Crockery was taken out of the cabinet too soon. ■ Leave it in for longer (see “Operation”).
	Combination products have been used which have impaired drying performance. ■ Change your detergent, or replenish the rinse aid (see “Before using for the first time, Rinse aid”).
Glassware has a brown or blue tinge, and film cannot be wiped off.	This may be caused by the detergent. ■ Change your detergent.
Glassware is dull and discoloured; film cannot be wiped off.	The glassware is not dishwasher-proof. The surfaces are affected. ■ There is no remedy. Purchase glassware which is dishwasher-proof.
Tea or lipstick stains have not been completely removed.	The wash temperature of the selected programme was too low. ■ Select a programme with a higher wash temperature.
	The bleaching effect of the detergent used is too low. ■ Change your detergent.
Plastic items are discoloured.	Natural dyes e.g. from carrots, tomatoes or ketchup may be the cause. The amount of detergent used or its bleaching effect was not sufficient to deal with natural dyes. ■ Use more detergent (see “Operation, Detergent”). Discolouration is irreversible.

Problem	Cause and remedy
White residue is visible on crockery and cutlery, clouding occurs on glassware; film can be wiped off.	The rinse aid dosage is set too low. ■ Increase the dosage. See “Before using for the first time, Rinse aid”.
	There is no salt in the salt reservoir. ■ Fill the salt reservoir (see “Before using for the first time, Dishwasher salt”).
	The salt reservoir cap has not been screwed on correctly. ■ Replace it, making sure that it screws back on correctly.
	An unsuitable combination product has been used. ■ Change your detergent. Use a standard liquid, tablet or powder detergent.
	The water softener is programmed to too low a water hardness level. ■ Programme the water softener for harder water (see “Before using for the first time, Water softener”).
There are rust stains on cutlery.	The affected items are not corrosion resistant. ■ There is no remedy. Purchase cutlery which is dishwasher-proof.
	A programme was not run after dishwasher salt was added. Traces of salt have got into the wash cycle. ■ Always run the *QuickPowerWash* programme with the *Short* programme option selected and without any crockery in the dishwasher after adding dishwasher salt.
	The salt reservoir cap has not been screwed on correctly. ■ Replace it, making sure that it screws back on correctly.

Cleaning the water inlet filter

A filter is incorporated in the screw connection of the valve on the water inlet hose. The filter must be cleaned when dirty, otherwise insufficient water flows into the wash cabinet.

⚠ The plastic housing of the water connection contains an electrical component.
The housing must not be dipped in water.

Recommendation

If the mains water contains a large number of insoluble substances, we recommend fitting a large-area filter in the connection between the stopcock and the water inlet hose threaded union. This filter is available from Miele.

Cleaning the filter:

- Disconnect the dishwasher from the mains supply.
  Switch off at the mains socket and withdraw the plug.
- Close the stopcock.
- Unscrew the inlet hose.

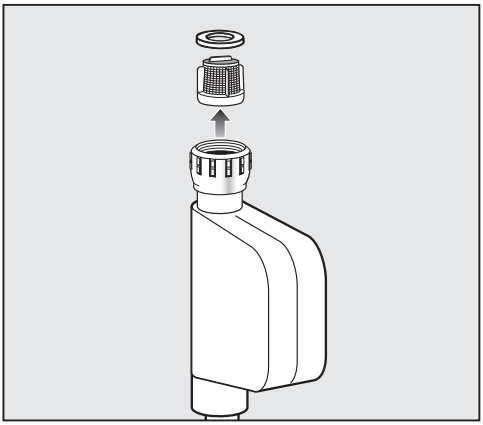

- Carefully remove the seal.
- Withdraw the filter using pointed pliers and rinse clean under running water.
- Replace the filter and seal, making sure they are sitting correctly.
- Reconnect the inlet hose to the stopcock, making sure it goes on correctly and is not cross-threaded.
- Open the stopcock.

If water leaks out, the inlet hose may not be connected securely or it may have been screwed on at an angle.

- Unscrew and reconnect the water inlet valve correctly.

Cleaning the drain pump and non-return valve

If the water has not been pumped away at the end of a programme the drain pump or the non-return valve might be blocked. They are, however, easy to clean.

- Disconnect the dishwasher from the mains supply. Switch off at the mains socket and withdraw the plug.
- Take the filter combination out of the wash cabinet (see “Cleaning and care”, “Cleaning the filters”).
- Scoop the water out of the cabinet using a suitable container or utensil.

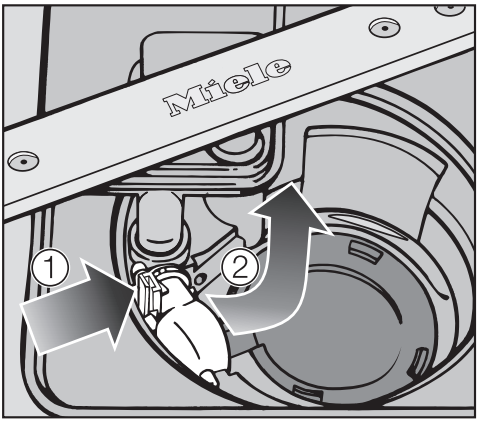

- Press the catch for the non-return valve inwards ①.
- Tilt the non-return valve inwards until it is released ②.
- Rinse it thoroughly under running water and remove any soiling from the non-return valve.

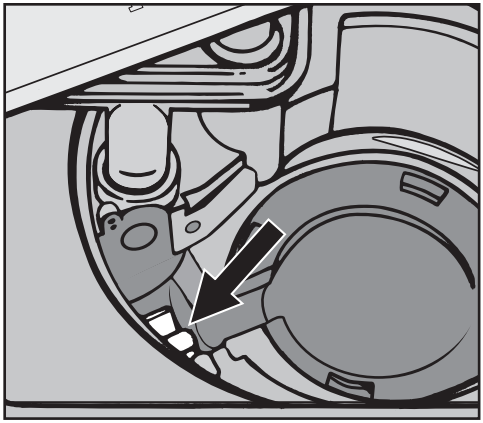

The drain pump is situated under the non-return valve (see arrow).

- Remove all foreign objects from the drain pump carefully (watch out for glass splinters which are particularly difficult to detect). Turn the drain pump impeller by hand to check that there are no more obstructions. You will feel a little resistance when you turn the impeller.
- Carefully replace the non-return valve.

⚠ Ensure that the catch engages correctly.

⚠ Be very careful not to damage sensitive components when cleaning the drain pump and the non-return valve.

Repairs

In the event of any faults which you cannot remedy yourself, please contact:

- your Miele Dealer, or
- the Miele Service Department

Contact details for Miele are given at the end of this booklet. N.B. A call-out fee will be charged for service visits where the problem could have been resolved as described in these instructions.

When contacting the Service Department or your Dealer, please quote the model and serial number of your dishwasher, both of which are shown on the data plate on the right hand side of the door.

Guarantee

In the U.K, the appliance is guaranteed for 2 years from the date of purchase. However, you must activate your cover by calling 0845 365 6640 or registering online at www.miele.co.uk.

Guarantee: Other countries

For information on the appliance guarantee specific to your country please contact Miele. See end of this booklet for contact details.

Note for test institutes

All information required regarding comparison testing and measuring noise levels is given in the **“Comparison tests”**.
The latest version of this leaflet can be ordered by email from:

- testinfo@miele.de

Please quote your postal address, as well as the model and serial number of your dishwasher (see data plate).

Optional accessories

Dishwasher detergent and rinse aid as well as cleaning and care products are available as optional accessories.
All the products are designed for use with Miele dishwashers.

These and many other useful products can be ordered from Miele or via the Miele Webshop (see end of this booklet for contact details).

Dishwasher detergent, rinse aid and salt

When you decided to buy a Miele dishwasher you chose excellent quality and performance. However, ensuring that your dishwasher always delivers the best possible results will also depend on your choice of dishwasher detergent, rinse aid and salt, as cleaning results can vary depending on the brand used.
With Miele products, you can be sure of optimum results as these products have been specially designed for Miele dishwashers.

Detergent tabs

- sparkling results even with stubborn food deposits
- combination product with other components such as rinse aid, salt and glass protection additives
- phosphate free - helps protect the environment
- water-soluble wrapping - no need to unwrap

Powder detergent

- with active oxygen for thorough cleaning
- with enzymes which are effective even in low temperature programmes
- with glass protection against corrosion

Rinse aid

- for sparkling glasses
- helps crockery to dry
- with glass protection against corrosion
- specially designed cap for precise, easy dispensing

Dishwasher salt

- prevents limescale on crockery and in the appliance
- extra coarse-grained

Dishwasher care products

Miele cleaning and care products provide optimum care for your dishwasher.

Dishwasher cleaner

- cleans the dishwasher effectively and thoroughly
- removes grease, bacteria and unpleasant odours
- ensures excellent dishwashing results

Descaling agent

- removes heavy limescale deposits
- mild and gentle with natural citric acid

Conditioner

- removes odours, limescale and light deposits
- maintains the elasticity and leak tightness of the seals

Freshener

- neutralises unpleasant odours
- fresh, pleasant lime and green tea scent
- easy to attach to the dishwasher basket
- very economical, lasts for 60 wash cycles

Electrical connection

The appliance is supplied with a mains cable with moulded plug ready for connection to a switched socket.

⚠ The electrical socket must be easily accessible after the dishwasher has been installed. Do not connect the dishwasher to the mains electricity supply by an extension lead. Extension leads do not guarantee the required safety of the appliance (e.g. danger of overheating).

If the connection cable is damaged, it must be replaced with a Miele cable of the same type (available from Miele) by a Miele approved service technician or suitably qualified person only.

Do not connect the appliance to an inverter such as those used with an autonomous energy source e.g. **solar power**. When switched on, peak loads in the system can cause the safety switch-off mechanism to be triggered. This can damage the electronic unit. The appliance must not be used with so-called **energy-saving devices** either. These reduce the amount of energy supplied to the appliance, causing it to overheat.

⚠ Before connecting the appliance, check that the connection data on the data plate (voltage, frequency and fuse rating) matches the mains electricity supply. If in any doubt, consult a qualified electrician.

The data plate is located on the right-hand side of the door.

⚠ The electrical installation must be in compliance with current local and national safety regulations. In the U.K. it must comply with BS 7671.

The Miele waterproof anti-leak system

Provided your dishwasher has been installed correctly, the Miele WaterProof System will protect you from water damage throughout its lifetime.

Connection to the water supply

⚠ Water in the dishwasher must not be used as drinking water.

- The dishwasher may be connected to a cold or hot water supply, max. 60 °C.
  We would only recommend connection to a hot water supply if it is economical, e.g. a solar powered supply. When connected to a hot water supply all programme stages which would otherwise be carried out with cold water will be carried out with hot water.
- The inlet hose is approx. 1.5 m long. A 1.5 m long flexible metal extension hose (pressure tested to 14000 kPa/140 bar) is available as an optional accessory, if required.
- A stopcock with a 3/4" male thread must be provided on site.
- This appliance is constructed to comply with IEC/EN/DIN 61770 // VDE 0700 Section 600, and may be connected to a suitable supply without an extra non-return valve if national regulations permit.
- The water pressure (flow pressure at the take-off point) must be between 50 and 1000 kPa (0.5 and 10 bar). If the water pressure is too high, a pressure reducer valve must be fitted.

After connecting the dishwasher to the water supply, check that all plumbing connections are watertight.

⚠ To avoid any damage to the appliance, the dishwasher must only be operated when it is connected to a fully vented plumbing system.

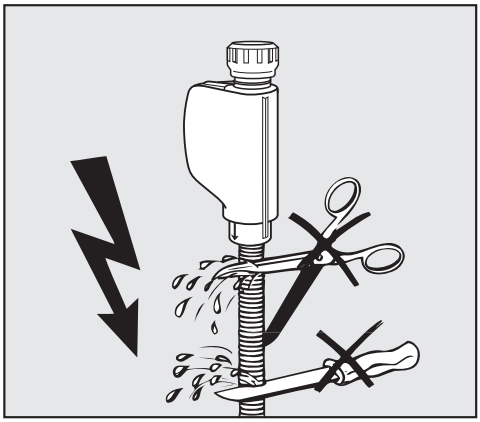

⚠ The inlet hose must not be shortened or damaged in any way as it contains electrical components (see illustration).

Drainage

- The appliance drainage system is fitted with a non-return valve, which prevents dirty water from flowing back into the dishwasher via the drain hose.
- The dishwasher is supplied with approx. 1.5 m of flexible drain hose with an internal diameter of 22 mm.
- The drain hose can be extended using a connection piece to attach a further length of hose. The drainage length must not be longer than 4 m, and the delivery head must not exceed 1 m.
- If the hose is to be directly fitted to the drainage outlet on site, use the hose clip supplied (see installation sheet).
- The hose can be directed to the left or the right of the appliance.
- The on-site connector for the drain hose can be adapted to different widths of hose. If the connector protrudes too far into the drain hose, it will need to be shortened. Otherwise the drain hose may become blocked.
- The drain hose must not be shortened.

⚠ Make sure that there are no kinks in the hose, and that it is not squashed or stretched.

After connecting the dishwasher to the drainage system, check that all plumbing connections are watertight.

Venting the drainage system

If the on-site drain connection is situated lower than the guide path for the bottom basket rollers in the open door, the drainage system must be vented. Otherwise a siphoning effect during a programme can cause the appliance to empty itself of water.

■ To vent it: Open the dishwasher door fully.

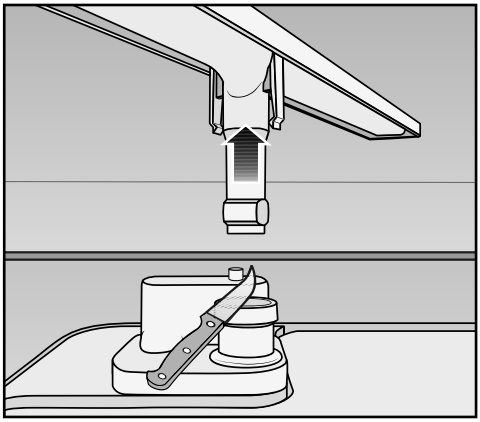

■ Pull the lower spray arm firmly upwards to remove it.

■ Cut off the top of the vent valve in the wash cabinet.

Technical data

Height freestanding model	84.5 cm (adjustable + 3.5 cm)
Height built-in model	80.5 cm (adjustable + 6.5 cm)
Height of building-in recess	Min. 80.5 cm (+ 6.5 cm)
Width	44.8 cm
Width of building-in recess	45 cm
Depth freestanding model	60 cm
Depth built-in model	57 cm
Weight	max. 47 kg
Voltage	See data plate
Connected load	See data plate
Fuse rating	See data plate
Power consumption when switched off	0.2 W
Power consumption when not switched off	2.0 W
Test certificates awarded	See data plate
Water pressure (flow rate)	50 - 1000 kPa (0.5 - 10 bar)
Hot water connection	Up to max. 65 °C
Delivery head	Max. 1 m
Drainage length	Max. 4 m
Mains cable	Approx. 1.7 m
Capacity	9 place settings

Data sheet for household dishwashers

In acc. with delegated regulation (EU) No. 1059/2010

MIELE	
Model name / identifier	G 4720 SC
Rated capacity in standard place settings, for the standard cleaning cycle	9
Energy efficiency class	
A+++ (most efficient) to D (least efficient)	A+
Annual energy consumption (AE_c) [1]	221 kWh/year
Energy consumption of the standard cleaning cycle (E_t)	0,78 kWh
Weighted power consumption in off-mode (P_o)	0,20 W
Power consumption in left-on mode (P_l)	2,00 W
Weighted annual water consumption (AW_c) [2]	2.436 Litres/year
Drying efficiency class	
A (most efficient) to G (least efficient)	A
Standard programme to which the information in the label and the fiche relates [3]	ECO
Programme time for the standard cleaning cycle	195 min
Duration of the left-on mode (T_l) [4]	10 min
Airborne acoustical noise emissions	46 dB(A) re 1 pW
Built-in	-

● Yes, standard feature

[1] Based on 280 standard cleaning cycles using cold water fill and the consumption of the low power modes. Actual energy consumption will depend on how the appliance is used.

[2] Based on 280 standard cleaning cycles. Actual water consumption will depend on how the appliance is used.

[3] This programme is suitable to clean normally soiled tableware and is the most efficient programme in terms of combined energy and water consumption.

[4] If the household dishwasher is equipped with a power management system.

Data sheet for household dishwashers

In acc. with delegated regulation (EU) No. 1059/2010

MIELE	
Model name / identifier	G 4720 SCI
Rated capacity in standard place settings, for the standard cleaning cycle	9
Energy efficiency class	
A+++ (most efficient) to D (least efficient)	A+
Annual energy consumption (AE_c) [1]	221 kWh/year
Energy consumption of the standard cleaning cycle (E_t)	0,78 kWh
Weighted power consumption in off-mode (P_o)	0,20 W
Power consumption in left-on mode (P_l)	2,00 W
Weighted annual water consumption (AW_c) [2]	2.436 Litres/year
Drying efficiency class	
A (most efficient) to G (least efficient)	A
Standard programme to which the information in the label and the fiche relates [3]	ECO
Programme time for the standard cleaning cycle	195 min
Duration of the left-on mode (T_l) [4]	10 min
Airborne acoustical noise emissions	46 dB(A) re 1 pW
Built-in	●

● Yes, standard feature

[1] Based on 280 standard cleaning cycles using cold water fill and the consumption of the low power modes. Actual energy consumption will depend on how the appliance is used.

[2] Based on 280 standard cleaning cycles. Actual water consumption will depend on how the appliance is used.

[3] This programme is suitable to clean normally soiled tableware and is the most efficient programme in terms of combined energy and water consumption.

[4] If the household dishwasher is equipped with a power management system.

Data sheet for household dishwashers

In acc. with delegated regulation (EU) No. 1059/2010

MIELE	
Model name / identifier	G 4720 SCU
Rated capacity in standard place settings, for the standard cleaning cycle	9
Energy efficiency class	
A+++ (most efficient) to D (least efficient)	A+
Annual energy consumption (AE_c) [1]	221 kWh/year
Energy consumption of the standard cleaning cycle (E_t)	0,78 kWh
Weighted power consumption in off-mode (P_o)	0,20 W
Power consumption in left-on mode (P_l)	2,00 W
Weighted annual water consumption (AW_c) [2]	2.436 Litres/year
Drying efficiency class	
A (most efficient) to G (least efficient)	A
Standard programme to which the information in the label and the fiche relates [3]	ECO
Programme time for the standard cleaning cycle	195 min
Duration of the left-on mode (T_l) [4]	10 min
Airborne acoustical noise emissions	46 dB(A) re 1 pW
Built-in	-

● Yes, standard feature

[1] Based on 280 standard cleaning cycles using cold water fill and the consumption of the low power modes. Actual energy consumption will depend on how the appliance is used.

[2] Based on 280 standard cleaning cycles. Actual water consumption will depend on how the appliance is used.

[3] This programme is suitable to clean normally soiled tableware and is the most efficient programme in terms of combined energy and water consumption.

[4] If the household dishwasher is equipped with a power management system.

United Kingdom
Miele Co. Ltd., Fairacres, Marcham Road, Abingdon, Oxon, OX14 1TW
Tel: 0330 160 6600, Internet: www.miele.co.uk/service, E-mail: info@miele.co.uk

Australia
Miele Australia Pty. Ltd.
ACN 005 635 398
ABN 96 005 635 398
1 Gilbert Park Drive
Knoxfield, VIC 3180
Tel: 1300 464 353
Internet: www.miele.com.au

China Mainland
Miele Electrical Appliances Co., Ltd.
1-3 Floor, No. 82 Shi Men Yi Road
Jing' an District
200040 Shanghai, PRC
Tel: +86 21 6157 3500
Fax: +86 21 6157 3511
E-mail: info@miele.cn,
Internet: www.miele.cn

Hong Kong, China
Miele (Hong Kong) Ltd.
41/F - 4101, Manhattan Place
23 Wang Tai Road
Kowloon Bay, Hong Kong
Tel: (852) 2610 1025
Fax: (852) 3579 1404
Email:
customerservices@miele.com.hk
Website: www.miele.hk

India
Miele India Pvt. Ltd.
Ground Floor, Copia Corporate Suites
Plot No. 9, Jasola
New Delhi - 110025
Tel: 011-46 900 000
Fax: 011-46 900 001
E-mail: customercare@miele.in
Internet: www.miele.in

Ireland
Miele Ireland Ltd.
2024 Bianconi Avenue
Citywest Business Campus
Dublin 24
Tel: (01) 461 07 10
Fax: (01) 461 07 97
E-Mail: info@miele.ie
Internet: www.miele.ie

Malaysia
Miele Sdn Bhd
Suite 12-2, Level 12
Menara Sapura Kencana
Petroleum
Solaris Dutamas No. 1
Jalan Dutamas 1
50480 Kuala Lumpur, Malaysia
Phone: +603-6209-0288
Fax: +603-6205-3768

New Zealand
Miele New Zealand Limited
IRD 98 463 631
8 College Hill
Freemans Bay, Auckland 1011
New Zealand
Tel: 0800 464 353
Internet: www.miele.co.nz

Singapore
Miele Pte. Ltd.
29 Media Circle
#11-04 ALICE@Mediapolis
Singapore 138565
sTel: +65 6735 1191
Fax: +65 6735 1161
E-Mail: info@miele.com.sg
Internet: www.miele.sg

South Africa
Miele (Pty) Ltd.
63 Peter Place
Bryanston 2194
P.O. Box 69434
Bryanston 2021
Tel: (011) 875 9000
Fax: (011) 875 9035
E-mail: info@miele.co.za
Internet: www.miele.co.za

Thailand
Miele Appliances Ltd.
BHIRAJ TOWER at EmQuartier
43rd Floor Unit 4301-4303
689 Sukhumvit Road
North Klongton Sub-District
Vadhana District
Bangkok 10110, Thailand

United Arab Emirates
Miele Appliances Ltd.
Showroom 1
Eiffel 1 Building
Sheikh Zayed Road, Umm Al Sheif
P.O. Box 114782 - Dubai
Tel. +971 4 3044 999
Fax. +971 4 3418 852
800-MIELE (64353)
E-Mail: info@miele.ae
Website: www.miele.ae

Manufacturer: Miele & Cie. KG, Carl-Miele-Straße 29, 33332 Gütersloh, Germany

Miele

G 4720

en-GB

M.-Nr. 10 384 601 / 02