Miele

HONEYCOMB CARE

Operating instructions for Washing machine W 3923 WPS

en - GB

To avoid the risk of accidents or damage to the machine it is **essential** to read these instructions before it is installed and used for the first time.

M.-Nr. 07 170 860

Caring for our environment

Disposal of the packing material

The transport and protective packing has been selected from materials which are environmentally friendly for disposal and can normally be recycled.

Ensure that any plastic wrappings, bags etc. are disposed of safely and kept out of the reach of babies and young children. Danger of suffocation!

Rather than just throwing these materials away, please ensure they are offered for recycling.

Disposal of your old appliance or machine

Electrical and electronic appliances / machines often contain materials which, if handled or disposed of incorrectly, could be potentially hazardous to human health and to the environment. They are, however, essential for the correct functioning of your appliance or machine. Please do not therefore dispose of your old machine or appliance with your household waste.

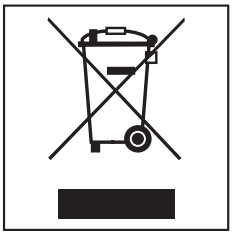

Please dispose of it at your local community waste collection / recycling centre or contact your Dealer for advice. Ensure that it presents no danger to children while being stored for disposal.

It should be unplugged or disconnected from the mains electricity supply by a competent person.

Contents

Caring for our environment 2
Warning and Safety instructions 6
Operating the washing machine 10
Control panel 10
Display 11
Before using for the first time 13
Washing environmentally and economically 15
Energy and water consumption 15
Detergent 15
How to wash correctly 16
Extra options 22
Short 22
Water plus 22
Pre-wash 22
Further extras 22
Soak 22
Rinse hold 22
Extra rinse 22
Spinning 23
Final spin speed 23
Rinse and interim spin 23
To omit the final spin (Rinse hold) 23
To omit rinse and interim spin and the final spin (No spin) 23
Delay start 24
Programme chart 26
Programme sequence 30
Garment care label symbols 32
Changing the programme sequence 33
Cancelling a programme 33
Interrupting a programme 33
Changing a programme 33
Adding or removing laundry after a programme has started 34
Safety lock 34

Contents

Detergent . . . 35
The correct detergent . . . 35
Water softener . . . 36
Washing with several components . . . 36
Fabric conditioners and liquid starch . . . 37
Automatic dispensing of fabric conditioner or liquid starch to laundry at the end of a programme . . . 37
Adding fabric conditioner or starch separately . . . 37
Colour run and dye removers/dyes . . . 37
Cleaning and care . . . 38
External casing and fascia panel . . . 38
Extra cleaning . . . 38
Cleaning the detergent dispenser drawer . . . 38
Descaling the machine . . . 39
Cleaning the filter in the water inlet . . . 40
Problem solving guide . . . 41
The programme does not start . . . 41
Fault messages in the display . . . 42
Problems with the load size indicator or calibrating to zero . . . 43
General problems . . . 44
An unsatisfactory wash result . . . 45
The door will not open . . . 46
Opening the drum door in the event of a blocked drain outlet and/or power failure . 47
Blocked drain outlet . . . 47
After sales service . . . 49
Future updates (PC) . . . 49
Appliance guarantee . . . 49
Optional accessories . . . 49
Installation and connection . . . 50
Front view . . . 50
Rear view . . . 51
Installation surface . . . 52
Installing the washing machine . . . 52
Removing the transit bars . . . 52
Re-fitting the transit bars . . . 54

Levelling the machine . . . 55
Screwing out and adjusting the feet . . . 55
Building under a continuous worktop/in a kitchen run . . . 56
Washer and Dryer stack . . . 56
The Miele Waterproof system . . . 57
Connection to the water supply . . . 58
Connection to the drainage system . . . 60
Electrical connection U.K. . . . 61
Consumption data . . . 62
Notes for test institutes: . . . 62
Technical data . . . 63
Settings menu . . . 65
To open the Settings menu . . . 65
Language . . . 65
Time (of day) . . . 65
Gentle action . . . 66
Longer pre-wash . . . 66
Suds cooling . . . 66
Lock code . . . 67
Temperature unit . . . 68
Buzzer . . . 68
Keypad tone . . . 68
Brightness . . . 68
Contrast . . . 68
Standby display . . . 69
Memory . . . 69
Anti-crease . . . 69
Optional accessories . . . 70
CareCollection . . . 70

This washing machine conforms to current safety requirements. Inappropriate use can, however, lead to personal injury and damage to property.

To avoid the risk of accidents and damage to the washing machine, please read these instructions carefully before using it for the first time. They contain important information on its installation, safety, use and maintenance.
Keep these instructions in a safe place and ensure that new users are familiar with the content. Pass them on to any future owner.

Correct application

▶ This washing machine is for domestic use only and can only be used to wash items which are specified by the manufacturer to be machine-washable on the wash care label, and textiles composed of hand-washable wool or wool blend fabrics as well as satin, lace, silk and other hand-washable garments.
Any other applications may be dangerous. Miele cannot be held liable for damage resulting from incorrect or improper use or operation.

▶ This washing machine is not intended for use by persons (including children) with reduced physical, sensory or mental capabilities, or lack of experience and knowledge, unless they are supervised whilst using it or have been shown how to use it by a person responsible for their safety.

Safety with children

▶ Keep children away from the washing machine at all times. It is not a toy! To avoid the risk of injury do not allow children to play on or near it or to play with its controls. Supervise children whilst you are using it.

▶ Older children may only use the washing machine if its operation has been clearly explained to them and they are able to use it safely, recognising the dangers of misuse.

▶ For machines with a 'porthole' door, remember that the porthole glass will be hot when washing at very high temperatures.
Do not let children touch it.

Technical safety

▶ Before setting up the washing machine, check it for any externally visible damage.
Do not install or use a damaged washing machine.

▶ Before connecting the washing machine, ensure that the connection data on the data plate (voltage and connected load) match the mains electricity supply. If in any doubt, consult a qualified electrician.

▶ The electrical safety of this washing machine can only be guaranteed when continuity is complete between it and an effective earthing system which complies with current local and national safety regulations. It is most important that this basic safety requirement is present and regularly tested, and where there is any doubt the household wiring system should be inspected by a qualified electrician. The manufacturer cannot be held liable for the consequences of an inadequate earthing system (e.g. electric shock).

▶ Do not connect the washing machine to the mains electricity supply by an extension lead. Extension leads do not guarantee the required safety of the appliance (e.g. danger of overheating).

▶ Faulty components must only be replaced by genuine Miele original spare parts. Only when these parts are fitted can the safety standards of the machine be guaranteed.

▶ Unauthorised repairs could result in unforeseen dangers for the user, for which Miele cannot accept liability. Repairs should only be undertaken by a Miele approved service technician. Ensure current is not supplied to the machine until after maintenance or repair work has been carried out.

▶ If the connection cable is faulty it must only be replaced by a Miele approved service technician to protect the user from danger.

▶ In the event of a fault or for cleaning purposes, the washing machine is only completely isolated from the electricity supply when:
- it is switched off at the wall socket and the plug is withdrawn, or
- it is switched off at the mains, or
- the mains fuse is withdrawn, or the screw-out fuse is removed (in countries where this is applicable).

▶ The Miele "Water protection system" protects from water damage provided the following conditions have been met:
- the machine is correctly plumbed in and connected to the electricity supply.
- if a fault has been identified, the machine must be examined by a competent person before further use, and repaired if necessary.

▶ In countries where there are areas which may be subject to infestation by cockroaches or other vermin, pay particular attention to keeping the machine and its surroundings in a clean condition at all times. Any damage which may be caused by cockroaches or other vermin will not be covered by the machine guarantee.

▶ This washing machine may only be used in mobile installations such as ships if a risk assessment of the installation has been carried out by a suitably qualified engineer.

▶ Do not make any alterations to the washing machine, unless authorised to do so by Miele.

Correct use

▶ Do not install your washing machine in rooms where temperatures below freezing may occur. Frozen hoses may burst or split. The reliability of the electronic control unit may be impaired at temperatures below freezing point.

▶ Before using the washing machine for the first time, check that the transit bars at the rear of the machine have been removed (see section on "Installation"). During spinning, a transit bar which is still in place may result in damage to both the machine and adjacent furniture or appliances.

▶ Turn off the stopcock if the machine is to be left for any length of time (e.g. holiday), especially if there is no floor drain (gully) in the immediate vicinity.

▶ Flooding danger.
If hooking the drain hose into a wash basin, check that the water can drain off quickly enough to prevent the sink from overflowing. Make sure the drain hose is secure, so that the force of the water flowing out of the hose does not dislodge it.

▶ Take care to ensure that foreign objects (e.g. nails, pins, coins, paper clips) do not find their way into the machine with the laundry. These may damage components of the machine (e.g. suds container, drum), which in turn can result in damage to the laundry.

▶ If the correct amount of detergent is dispensed, the machine should not need to be descaled. If, however, you do wish to descale the machine only use proprietary non-corrosive descaling agents and strictly observe the instructions on the packaging. A special descaling agent is available to order from the Miele Spare Parts Department or via the internet on www.miele-shop.com.

▶ Textiles which have been pre-treated in solvent based cleaning agents must be thoroughly rinsed in clean water before being washed in the machine.

▶ Never use solvent based cleaning agents, e.g. those containing benzene, in this machine, as this may result in damage to component parts and create toxic fumes. Such agents also pose a fire and explosion hazard.

▶ Never use solvent based cleaning agents, e.g. those containing benzene, to clean the outside surfaces of this machine. They can cause damage to plastic surfaces.

▶ Only use dyes specified by the manufacturer as being suitable for use in a domestic washing machine. Always observe the manufacturer's instructions carefully.

▶ Colour run and dye removers contain sulphur compounds which can cause damage such as corrosion. Do not use these products in this machine.

▶ If liquid detergent comes into contact with the eyes, rinse them thoroughly with lukewarm water immediately. If swallowed, seek medical assistance immediately and retain the packaging or label for reference. Those with skin problems or sensitive skin should avoid their skin coming into contact with liquid detergent.

▶ Only remove laundry from the washing machine once the drum has stopped turning. Reaching into a moving drum is extremely dangerous and could result in injury.

Accessories

▶ Accessory parts may only be fitted when expressly approved by Miele. If other parts are used, guarantee, performance and product liability claims will be invalidated.

Miele cannot be held liable for damage caused by non-compliance with these Warning and Safety instructions.

Control panel

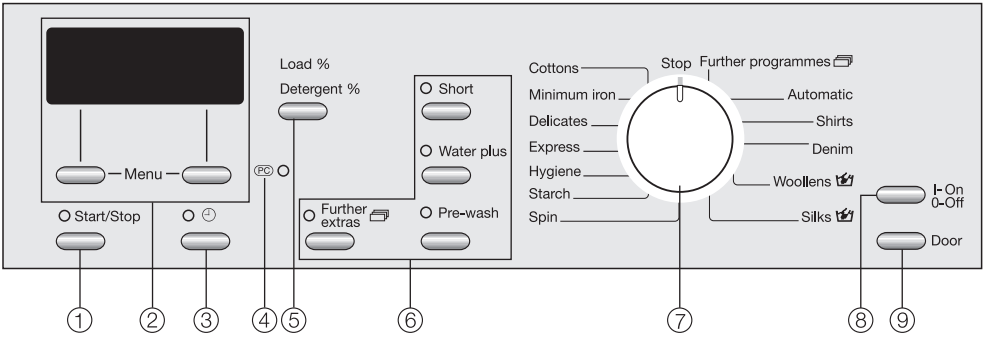

① ***Start/Stop*** **button**
For starting the programme selected and cancelling a programme once it has started.

② **Display with *Menu* buttons**
See the next pages for more information.

③ **button**
For selecting delay start.

④ **PC / Optical interface**
This is used by service technicians to run diagnostic checks on your machine and can also be used to update programming data in the future.

⑤ ***Load/Detergent*** **button**
For calling up the load size or the recommended amount of detergent, and for calibrating the load size sensor to zero.

⑥ ***Extra options*** **buttons**
Various extra options can be added to the washing programmes.

⑦ **Programme selector**
For selecting the wash programme and temperature for that programme. The programme selector can be turned clockwise or anti-clockwise.

⑧ ***I-On/0-Off*** **button**
For switching the machine on or off.

⑨ ***Door*** **button**
Opens the machine door.

Display

The display is used for the following:

Selecting and displaying settings

- Temperature
- Spin speed
- Soak duration
- Delay start
- Cancelling a programme
- Safety lock
- Estimated programme duration

Selecting programmes via the display

With the programme selector at the *Further programmes* position, you can select one of the following programmes:

- Dark garments
- Curtains
- Pillows
- Sportswear
- Outerwear
- Proofing
- Separate rinse

Selecting extra options via the display

By pressing the *Further extras* button, you can select (depending on the programme) the following extra options:

- Soak
- Rinse hold
- Extra rinse

Menu buttons

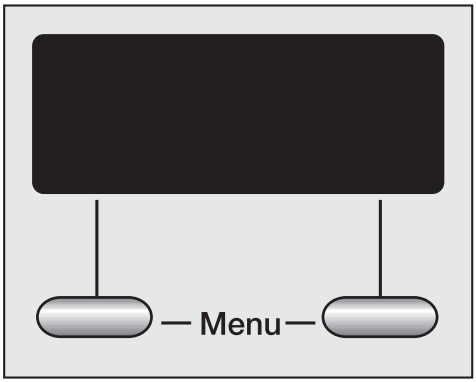

Various settings are made via the *Menu* buttons.

They are used to alter or confirm the value displayed above the vertical line.

To alter a setting:

Pressing the left hand *Menu* button under **60°C** alters the temperature and pressing the right hand *Menu* button under **1600 rpm** alters the spin speed.

To confirm a setting:

Pressing the left hand *Menu* button under **Continue** calls up further programmes, and you can then confirm your selection of the highlighted programme by pressing the right hand *Menu* button under **OK**.

Before using the machine for the first time ensure that it is correctly installed and connected. See "Installation and connection". Also check that the drain filter is securely tightened to prevent the risk of water leaks during use.

This washing machine has undergone a thorough functional test in the factory and there will be some residual water in the drum from this process.

The washing machine has a sensor which measures the amount of laundry in the drum. This determines the amount of detergent required. To allow the load size indicator to function correctly, you must first run a wash programme without any laundry and without detergent.

- Open the stopcock.
- Press the *I-On/0-Off* button in.

If the washing machine is being switched on for the first time, the welcome screen will appear.

The welcome screen will appear in the display every time the machine is switched on until a programme lasting longer than 1 hour has been completed.

The display for setting the language will then appear.

Setting the language

You will be asked to select the language you require for the display. It is possible to change the language at any time via the *Settings* menu.

- If the language shown is not the one you want, select the language you do want by pressing the left hand *Menu* button under ▶. Confirm your selection by pressing the right hand *Menu* button under **OK**.

Setting the time of day

The display for setting the time will then appear.

- Select the hours you want by pressing the left hand *Menu* button under **Change**, and confirm this with the right hand *Menu* button under **OK**.
- Then set and confirm the minutes.

Reminder to remove transport struts

To avoid the risk of damage, the transport struts must be removed before the machine is used for the first time. See "Installation and connection" for instructions on how to do this.

- After removing the transport struts (if this has not already been done by your fitter) press the right hand *Menu* button under **OK**.

Running your first programme

Your machine is now ready for the first programme to be run.

- Turn the programme selector to the *Cottons* position.
- Press the *Start/Stop* button.
- At the end of the programme switch the machine off.

Before you can use the washing machine, the load sensor has to be calibrated to zero as you would with bathroom scales.

Calibrating the load sensor to zero

- Switch on the washing machine.
- Open the drum door.
- Turn the programme selector to the *Cottons* position.

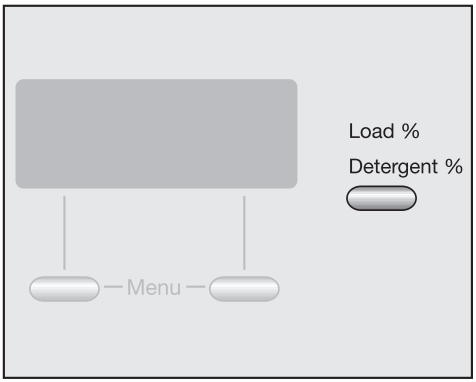

- Press and hold the *Load/Detergent* button pressed in until the following message appears in the display:

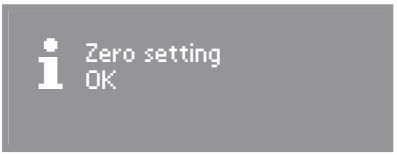

- Switch off the washing machine.

The machine is now ready for use.

Energy and water consumption

- Water consumption and energy usage are determined by the size of the load.
  To make the most out of your machine, load the maximum dry load for the programme you are using.
- Use the *Automatic* and *Express* programmes for small loads.
- When smaller amounts of laundry are washed using the *Cottons* programme, the automatic load recognition system will reduce the amount of water, time and energy used. This may mean that the time left shown in the display is adjusted during the course of the wash programme.
- Using the *Cottons 60°C* programme instead of the *Cottons 95°C* programme will give energy savings of between 35% and 45%. This is sufficient for most levels of soiling. For stubborn or old stains, use the *Soak* extra option.

Detergent

- Do not exceed the amounts of detergent recommended by the manufacturer on the packaging.
- Adjust the dosage to the degree of soiling of the laundry.
- Reduce the amount of detergent for smaller loads. Use the *Load/Detergent* button.

Choosing the correct Extra option (Short, Soak, Pre-wash)

Select:

- A wash programme together with the *Short* extra option for light to normal soiling where there are no obvious marks.
- A wash programme without any extra options for normal to heavy soiling with visible staining.
- A wash programme together with the *Soak* extra option for heavily soiled laundry.
- The *Pre-wash* extra option for laundry with large amounts of dirt (e.g. dust, sand).

When drying with a tumble dryer

Selecting the highest possible spin speed for the wash programme will save energy when drying in a tumble dryer afterwards.

Brief instructions

The headings numbered ❶, ❷, ❸, . . . show the operating sequence and can be used as brief instructions.

❶ Sort the laundry

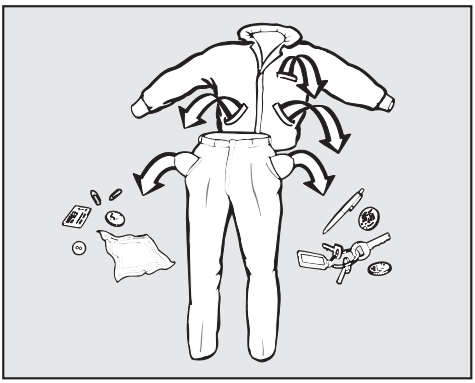

- Empty all pockets.

> ⚠ Foreign objects (e.g. nails, coins, paper clips, etc.) can cause damage to garments and components in the machine.

- Badly soiled areas, stains etc. should be cleaned as soon as possible, preferably whilst still fresh. Spillages should be carefully dabbed off using a soft colourfast cloth. Do not rub!

Badly soiled areas can be pre-treated with liquid detergent, stain removers etc. first, following the manufacturer's instructions. With particularly stubborn stains ask your dry cleaner for advice.

> ⚠ If you use a solvent-based cleaning agent (e.g. one containing benzene) to pre-treat a stain, make sure that any plastic parts (e.g. buttons) are protected, and that the cleaning agent is rinsed off before washing the garment in the machine.

> ⚠ Do not use solvent-based cleaning agents in this machine.

- Sort the laundry by colour and by care label. Most garments have a textile care label in the collar or side seam.

Dark textiles often contain excess dye and should be washed separately several times before being included in a mixed load. Always wash whites and coloureds separately.

– Curtains: Remove lead weights first or place in a laundry bag.
– Underwiring and collar stiffeners: Any loose wiring in bras, shirt collar stiffeners, etc. should be removed or sewn in.
– Knitted garments, trousers and jeans, T-shirts and sweat shirts: Turn inside out, if recommended by the manufacturer.
– Close any zips, fasten hooks and eyes etc before washing.
– Fasten duvet covers etc. to prevent small items from being rolled up inside them.

Do not wash any items in this machine which are specified by the manufacturer as **not washable** on the care label. (⊠ symbol)

❷ Switch on the washing machine

The interior drum lighting will come on.

The programme selector will light up and the display will ask you to select a programme.

❸ Select a programme

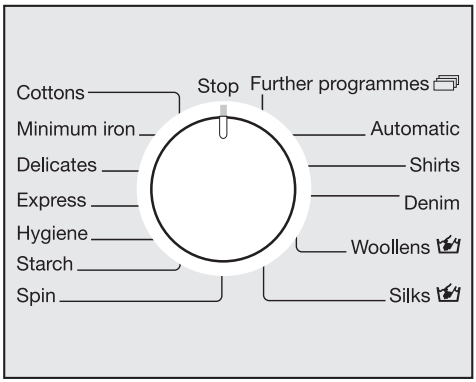

- Turn the programme selector to the required programme.

  The programme selected will appear in the display.

❹ Select a temperature / spin speed

The suggested temperature and/or spin speed can be changed if required.

- By pressing the left hand *Menu* button under **60°C** you can alter the temperature, and by pressing the right hand *Menu* button under **1600 rpm** you can alter the spin speed.

When you turn the programme selector to *Further programmes*, these will appear in the display.

- Pressing the left hand *Menu* button under **Continue** calls up the further programmes, and you can then confirm your selection of the highlighted programme by pressing the right hand *Menu* button under **OK**.

- The suggested temperature and/or spin speed can now be changed if required.

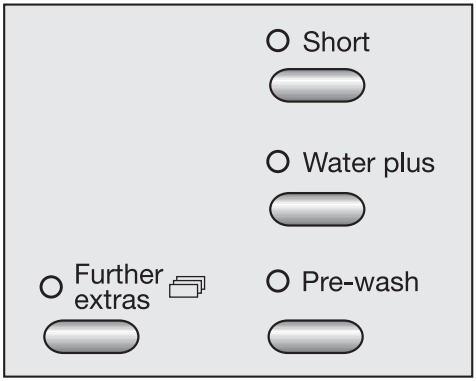

- Select any extra options by pressing the appropriate button. The relevant indicator light will come on to show which extra option has been selected.
- Press the *Further extras* button to select the following extra options (depending on the programme selected): *Soak*, *Rinse hold* and *Extra rinse*.

Not all the extra options are suitable for use with every programme.

You can only select extra options which are compatible with the basic programme being used.

❺ Load the drum

- Press the *Door* button to open the drum door.

The load size indicator display will appear.

The display shows the amount of laundry loaded in the drum as a % (in 25% steps) of the maximum load permissible for the programme selected.

- Unfold the laundry and load loosely in the drum. Mixing both large and small items gives better wash results and also helps distribute the load evenly during spinning.

The most efficient use of energy and water is achieved when a full load is washed. However, do not overload as this causes creases and reduces cleaning efficiency.

Make sure that no garments are caught between the drum door and seal.

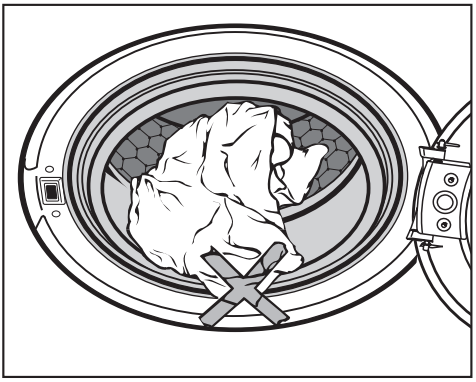

- Shut the door with a gentle swing.

❻ Add detergent

When the door is closed, the load size indicator will be replaced with the detergent percentage display.

The percentage shown relates to the amount of detergent recommended by the manufacturer on the packaging.

40% = Add slightly less than half the amount recommended

50% = Add half the amount recommended

60% = Add slightly more than half the amount recommended

75% = Add three quarters of the amount recommended

100% = the full amount of detergent recommended

You also need to take the level of soiling and water hardness into account.

It is important to dispense the correct amount because . . .

. . . too little detergent results in:

- Laundry not getting properly clean and with time it may become grey and hard to the touch.
- Greasy particles clinging to the laundry.
- Limescale deposits on the heater elements.

. . . too much detergent results in:

- Excessive foam which causes a low level of agitation and poor wash, rinse and spin results.
- High water consumption (an additional rinse cycle will automatically switch in).
- A burden to the environment.

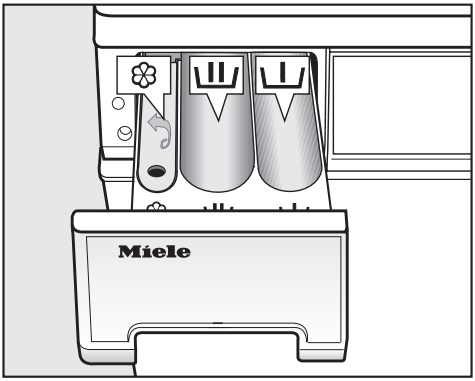

- Pull out the detergent drawer and add detergent to the compartments as follows:

I

Detergent for the pre-wash (divide the total recommended amount as follows: add $^{1}/_{3}$ to compartment I and $^{2}/_{3}$ to compartment II)

II

Detergent for the main wash, including Soak if selected

❀

Fabric conditioner or liquid starch

- Close the detergent drawer.

See "Detergent" for further information.

❼ Select Delay start (if required)

- Press the ⏲ button to set the time you wish to programme to end at.

See "Delay start" for more information.

❽ Start the programme

- Press the flashing *Start/Stop* button.

If a delay start time has been set, then this will count down in the display. At the end of the delay start time or immediately after the programme has started (if no delay start time has been selected) the estimated programme duration will appear in the display. During the first 8 minutes the machine measures how much water is being absorbed by the laundry. The programme duration may be longer or shorter depending on this absorbency rate.

The programme sequence is also shown in the display. The machine lets you know which section of the programme has been reached.

The drum lighting switches off once the programme has started.

❾ Remove the laundry when the programme has finished

In the anti-crease phase after the programme has finished, the following will appear alternately in the display:

and

- Press the *Door* button to open the drum door.
- Remove the laundry.

Check that all items have been removed from the drum. Items left in the drum could discolour other items in the next wash or become discoloured themselves.

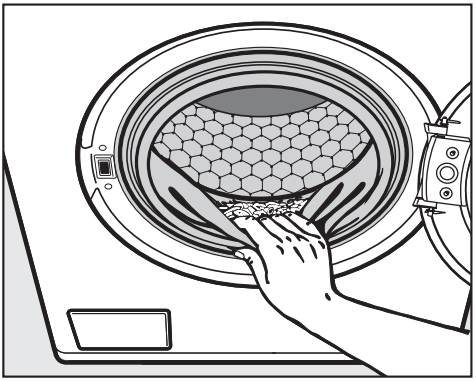

- Check the folds in the door seal for any small articles, e.g. buttons, which might be lodged there.

Important
Always remove the laundry before switching the machine off. This is important to ensure that the load size indicator works correctly.

- Turn the programme selector to *Stop*.
- Switch the machine off with the *I-On/0-Off* button.
- Close the drum door. Otherwise there is the danger of objects being placed inadvertently in the drum. If these remained unnoticed and were washed in the next load, they could damage the laundry.

Short

For light to nomal soiling with no visible staining.

The duration of the main wash is reduced.

Water plus

The water level in the main wash and the rinses will be increased if the *Water plus* option is selected.

Pre-wash

For laundry with large amounts of dirt e.g. dust, sand.

Further extras

Soak

For heavily soiled and stained items with protein stains (e.g. blood, fats and oils, cocoa).

A length of time of between 30 minutes and 6 hours can be chosen in 30 minute increments for the soak process.

– To select the soak duration

■ Press the *Further extras* button.

■ Select *Soak* by pressing the right hand *Menu* button under **OK**.

You can now use the display to select the soak time you require.

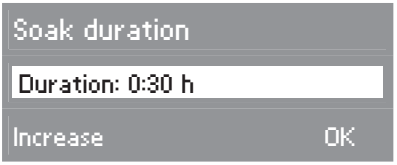

■ Each time the left hand *Menu* button under **Increase** is pressed, the soak duration is increased by 30 minutes. Confirm the duration required by pressing the right hand *Menu* button under **OK**.

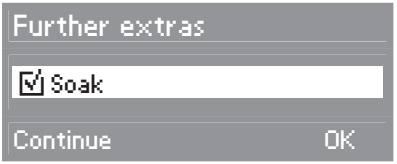

■ Press the left hand *Menu* button under **Continue** until *Back* appears in the display and confirm this with the right hand *Menu* button under **OK**.

– To delete the soak time

■ Press the *Further extras* button, and then the right hand *Menu* button under **OK** to switch off *Soak*.

Rinse hold

See the next page.

Extra rinse

An additional rinse cycle is carried out to achieve a better rinse result.

Final spin speed

Programme	rpm
Cottons	1600
Minimum iron	1200
Delicates	600
Woollens	1200
Automatic	1200
Shirts	600
Express	1600
Denim	900
Hygiene	1600
Dark garments	1200
Curtains	600
Pillows	1200
Silks	400
Sportswear	1200
Outerwear	800
Proofing	1000
Drain / Spin	1600
Separate rinse	1200
Starch	1500

You can reduce the final spin speed. However, you cannot select a final spin speed higher than that shown in the chart above.

Rinse and interim spin

There is a spin after the main wash and between the rinses. A reduction in the final spin speed will also reduce the interim spin speed. If a spin speed of less than 700 rpm is selected in the *Cottons* and *Hygiene* programmes, an additional rinse is introduced.

To omit the final spin (Rinse hold)

■ Press the *Further extras* button and select the *Rinse hold* setting. The laundry will not be spun and will remain suspended in the final rinse water. This reduces creasing if the laundry is not going to be removed from the drum immediately after the end of the programme.

– To start the final spin:

  The washing machine will display the maximum spin speed possible. You can select a spin speed lower than this. Start the final spin by pressing the *Start/Stop* button.

– To end the programme:

  Press the *Door* button. The water will drain away. Press the *Door* button again to open the door.

To omit rinse and interim spin and the final spin (No spin)

■ Select *No spin* from the spin speed menu. The laundry is not spun after the final rinse. The water will drain away and the machine will go straight into the anti-crease stage. An additional rinse is introduced if this setting is selected with the *Cottons*, *Hygiene*, *Minimum iron*, *Express* and *Automatic* programmes.

Delay start

With delay start you can choose when you want the programme to end. The start of a programme can be delayed from 30 minutes up to a maximum of 24 hours, allowing you to make use of night-time economy electricity rates, for example.

The current time of day needs to have been set for delay start to work correctly.

To select delay start

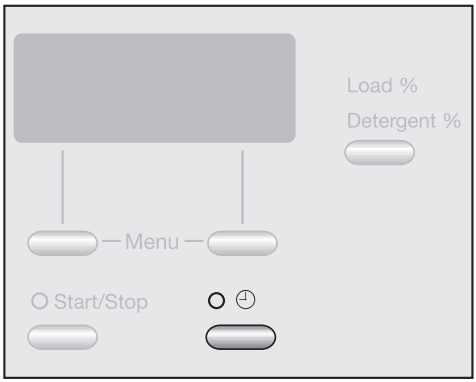

❶ Select the programme you want and then press the ◷ button.

The display shows the start time: from xxx, the time for the programme to end: to xxx, and the current time.

❷ Use the left hand *Menu* button under **Change** to select the time you want the programme to end at.

The first press on the button will adjust the programme end time to the next half or full hour. Each subsequent press on the button will delay the programme end time by 30 minutes.

❸ Confirm the time you require by pressing the right hand *Menu* button under **OK**.

To begin delay start

❹ Press the *Start/Stop* button.

The display will show when the programme will be started in hours and minutes.

To alter delay start

You can subsequently select a later programme end time if you wish.

- Press the ⊖ button.

- Use the left hand *Menu* button under **Change** to alter the time you want the programme to end at.
- Confirm by pressing the right hand *Menu* button under **OK**.

To delete delay start

You can delete the delay start time and start the selected programme straight away.

- Press the ⊖ button.

- Press the right hand *Menu* button under **Delete**.
- Press the *Start/Stop* button to start the programme straight away.

To cancel delay start

- Press the *Start/Stop* button.

The following will appear in the display:

- Confirm by pressing the right hand *Menu* button under **OK**.
- Now you can select a different programme, or
- Press the *Start/Stop* button to start the programme straight away.

The actual load size can only be determined accurately by the machine once the programme has started. The programme end time may, therefore, be a bit later or earlier than first indicated.

Programme chart

Cottons 95 60 50 40 30*	**30°C to 95°C**	**Max. load 6.0 kg**
Fabric	Cottons, linens or cotton mix fabrics, e.g. table linen, towelling, underwear, T-shirts etc.	
Extra options	Pre-wash, Soak, Short, Water plus, Rinse hold, Extra rinse	
Note for test institutes: Short programme: 3.0 kg load and *Short* extra option		
Minimum iron 60 50 40 30 60 50 40 30*	**30°C to 60°C**	**Max. load 3.0 kg**
Fabric	Synthetics, mixed fibres and easy care cottons. If fabrics have a high proportion of man-made fibres, it is advisable to programme the machine for "Gentle action". See "Settings menu".	
Note	Reduce the spin speed for fabrics which crease easily.	
Extra options	Pre-wash, Soak, Short, Water plus, Rinse hold, Extra rinse	
Delicates 60 50 40 30 40 30*	**cold to 60°C**	**Max. load 2.0 kg**
Fabric	For delicate garments made of synthetic fibres, mixed fibres, rayon and easy care cottons.	
Extra options	Pre-wash, Soak, Short, Rinse hold	
Woollens 40 30*	**cold to 40°C**	**Max. load 2.0 kg**
Fabric	Machine-washable or hand-washable wool or wool blend fabrics. If the care label does not specify a temperature, wash using the cold setting.	
Extra option	Rinse hold	
Automatic 40 30 40 30*	**cold to 40°C**	**Max. load 3.5 kg**
Fabric	Mixed loads of garments suitable for the *Cottons* and *Minimum iron* programmes. Sort according to colour.	
Note	The wash parameters (e.g. water level, wash rhythm and spin speed) are adjusted automatically in this programme to ensure the best possible care and wash result for each item.	
Extra option	Rinse hold	

Shirts	**cold to 60°C**	**Max. load 2.0 kg**
Notes	– Pre-treat collars and cuffs if necessary. – Wash silk garments in the *Silks* programme.	
Extra options	Short, Water plus, Rinse hold	
Express 40 30 *	**cold to 40°C**	**Max. load 3.0 kg**
Fabric	Small loads of items which require freshening up and which can be washed in a *Cottons* programme.	
Extra options	Water plus, Rinse hold, Extra rinse	
Denim	**cold to 60°C**	**Max. load 3.0 kg**
Notes	– Wash denim inside out. – Denim often contains excess dye and will run during the first few washes. Wash light and dark coloured items separately.	
Extra options	Pre-wash, Soak, Short, Rinse hold	
Hygiene 60 *	**60°C**	**Max. load 6.0 kg**
Fabric	Fabrics which will be in direct contact with the skin, e.g. underwear, nappies, towelling, bed linen, pillow and mattress covers.	
Note	There is a longer temperature holding time in the main wash.	
Extra options	Pre-wash, Soak, Water plus, Rinse hold, Extra rinse	
Dark garments	**cold to 40°C**	**Max. load 3.0 kg**
Item	Dark garments made from cotton or mixed fibres.	
Note	Wash inside out.	
Extra options	Short, Rinse hold	

Curtains	**cold to 40°C**	**Max. load 2.0 kg**
Item	Curtains, including net curtains, specified as machine-washable by the manufacturer. A pre-rinse **without** detergent is carried out automatically to remove dust.	
Note	For curtains which crease easily, reduce the spin speed or deselect it.	
Extra options	Water plus, Rinse hold	
Pillows	**40°C to 60°C**	**2 pillows (40 x 80 cm) or 1 pillow (80 x 80 cm)**
Item	Washable pillows with feather, down or synthetic fillings.	
Note	Please observe the instructions on the wash care label.	
Extra options	Water plus, Rinse hold	
Silks 30*	**cold to 30°C**	**Max. load 1.0 kg**
Fabric	Silks and other handwashable fabrics with no wool content, e.g. satin, lace and silk.	
Note	Place tights, bras etc. in a washing bag.	
Extra options	Water plus, Rinse hold, Extra rinse	
Sportswear	**30°C to 60°C**	**Max. load 2.0 kg**
Item	Lightly soiled sports garments which require washing or freshening up.	
Extra options	Pre-wash, Soak, Short, Water plus, Rinse hold	

Outerwear	**cold to 40°C**	**Max. load 2.0 kg**
Item	Outerwear made from micro-fibres such as Gore-Tex®, SYMPATEX®, WINDSTOPPER® etc.	
Notes	– Zip up jackets before washing. – Do not use fabric conditioner.	
Extra options	Pre-wash, Soak, Short, Water plus, Rinse hold	
Proofing	**40°C**	**Max. load 2.0 kg**
Item	For treating microfibre fabrics, skiwear, fine, closeweave cotton garments (poplin) or tablecloths to provide a water and dirt resistant finish.	
Notes	– The items should be freshly washed and spun or dried before proofing. – For best results, the items should be heat-treated afterwards, either in a tumble dryer or by ironing.	
Extra option	Rinse hold	
Spin		**Max. load 6.0 kg**
Notes	– Drain only: Select *No spin*. – Make sure you select the appropriate spin speed.	
Separate rinse		**Max. load 6.0 kg**
Extra option	Rinse hold	
Starch		**Max. load 6.0 kg**
Note	The laundry (table cloths, napkins, overalls) should be washed but not treated with fabric conditioner.	
Extra option	Rinse hold	

* Please note that the "buckets" represent garment care label symbols. See "Garment care label symbols".

Programme sequence

	Main wash		Rinses		Spinning	
	Water level	Wash rhythm	Water level	Rinses	Interim spin	Final spin
Cottons		A		2-4[3)4)]	✓	✓
Minimum iron		C		2-3[5)]	✓	✓
Delicates		D		3	–	✓
Woollens		E		2	✓	✓
Automatic		A B C		2-3[5)]	✓	✓
Shirts		C		2	–	✓
Express		B		2-3[5)]	✓	✓
Denim		C		3	–	✓
Hygiene		B		3-4[4)]	✓	✓
Dark garments		B		3	✓	✓
Curtains[1)]		D		3	–	✓
Pillows[2)]		D		3	–	✓
Silks		E		2	–	✓
Sportswear		C		2	✓	✓
Outerwear		D		3	✓[6)]	✓
Proofing		D	–	–	–	✓
Drain / Spin	–	–	–	–	–	✓
Separate rinse	–	–		2	–	✓
Starch		C	–	–	–	✓

= Low water level
= Medium water level
= High water level

A = Intensive rhythm
B = Normal rhythm
C = Gentle rhythm
D = Sensitive rhythm
E = Handwash rhythm

See the following page for more information about the programme sequences.

This machine has fully electronic controls with automatic load recognition. It takes in the right amount of water required for the programme depending on the amount of laundry and its absorbency rate. This means that programme cycles and durations can vary.

The programme sequences outlined in the chart are based on the basic programme with a full load. Extra options which can be selected have not been taken into account.

The display shows the stage the programme has reached.

Special features in the programme sequences:

Anti-crease:

At the end of every programme, with the exception of the *Woollens* programme, the drum continues to turn at intervals for up to 30 minutes to help prevent creasing. The door can be opened and laundry removed at any time during the anti-crease phase.

1) Pre-rinse: A pre-rinse without detergent is carried out automatically to remove dust.

2) Run-up to spin: A run-up to spin is carried out before the wash process begins to deflate the pillows. Subsequent water intake for the main wash is through compartment ⅢI.

3) A second rinse is carried out when a temperature of 60°C to 95°C has been selected. A third rinse is carried out when a temperature below 60°C is selected.

4) A third/fourth rinse is carried out if:

– there is too much foam in the drum

– a spin speed lower than 700 rpm has been selected

– *No spin* has been selected

5) A third rinse is carried out if:

No spin has been selected

6) In the *Outerwear* programme, laundry is only spun after the main wash.

Garment care label symbols

Washing	
The figure quoted in the bucket is the maximum temperature the garment can be washed at. The number of bars under the symbol indicates the level of agitation permitted.	
95	No bar under the symbol: = normal agitation
60	One bar under the symbol: = reduced agitation
30	Two bars under the symbol: = much reduced agitation
	Hand wash (if no temperature is specified use the lowest temperature or cold)
	Do not wash

Drying	
The number of dots indicates the drying temperature	
	Normal temperature
	Low temperature
	Do not tumble dry

Ironing	
The number of dots indicates the ironing temperature	
	Hot iron (max sole plate temp. approx. 200°C)
	Medium hot iron (max sole plate temp. approx. 150°C)
	Cool iron (max sole plate temp. approx. 110°C). Do not steam iron garments carrying this symbol.
	Do not iron

Professional cleaning	
F	Dry clean only. The letters indicate the type of cleaning agent required.
P	
W	Professional Wet Clean only
	Do not dry clean

Bleaching	
	Any oxidising bleaching agent can be used
	Only use an oxygen based bleach or a non-chlorine bleach
	Do not bleach

Cancelling a programme

You can cancel a programme at any time after it has started.

- Press the *Start/Stop* button.

- Press the right hand *Menu* button under **OK**.

The suds will be pumped away.

<u>If you want to remove the laundry:</u>

- Press the *Door* button.

<u>If you want to select a different programme:</u>

- Switch the machine off with the *I-On/0-Off* button.
- Switch the washing machine back on again.
- Check that there is still detergent in the detergent drawer. Add detergent, if necessary.
- Select and start a new programme.

Interrupting a programme

- Switch the machine off with the *I-On/0-Off* button.

To continue with the same programme:

- Switch the machine back on with the *I-On/0-Off* button.

Changing a programme

After the start of a programme it is no longer possible to select a different programme.

Temperature

It is possible to select a different temperature up to 5 minutes after the programme has started.

Spin speed

It is possible to change the spin speed up until the final spin begins.

Extra options

It is possible to select or deselect the *Short* and *Water plus* extra options up to 5 minutes after the programme has started.

> It is not possible to make any changes if the safety lock has been activated.

Adding or removing laundry after a programme has started

- Press the *Door* button to open the drum door.
- Add or remove items.
- Close the drum door.

The programme will continue automatically.

Please note:

Once a programme has started the machine cannot recognise any adjustment to the load.

For this reason, if laundry is added or removed after the start of a programme, the machine will always complete the programme cycle assuming a full load which can lead to an increase in the programme duration shown in the display.

The door cannot be opened, if:

– the suds temperature is above **55°C**.

– the water is above a certain level.

– the programme has reached the *Final spin* stage.

If you press the *Door* button when the above conditions are present, the following will appear in the display:

Door locked

Safety lock

The safety lock prevents the machine from being opened or the programme cancelled during a wash programme.

To activate the safety lock

- Press and hold in the *Start/Stop* button after the programme has started.

By pressing the left hand *Menu* button under **Continue**, the following will appear in the display:

Activate safety lock

- Confirm by pressing the right hand *Menu* button under **OK**.

The following will appear in the display:

Locked

The safety lock is now activated. It is deactivated automatically at the end of the programme.

To deactivate the safety lock

- Press the *Start/Stop* button.

The following will appear in the display:

Deactivate safety lock

- Press the right hand *Menu* button under **OK**, and then the following will come up in the display:

Unlocked

The correct detergent

All modern detergents produced for automatic washing machines are suitable. Use dispensing aids, e.g. balls, if these are supplied with the detergent. Tablets are suitable for full loads, but note that it may be impractical to reduce tablets for smaller loads. Some tablets do not dissolve as rapidly as others, and may not be suitable for programmes with short durations.

Do not use biological detergents on silk as the enzymes may damage the silk! Instructions for use and recommended dosage amounts are given on the detergent packaging.

Liquid detergent should be dispensed using a ball provided by the manufacturer for programmes without a pre-wash.

For programmes with a pre-wash you will need to purchase a special container from the Miele Spare Parts department which sits in the main wash compartment ⅡI of the detergent dispenser drawer. Add liquid detergent to this container for the main wash and to compartment I for the pre-wash.

	All purpose detergent for whites*	**Detergent for coloured fabrics***	**Detergent for delicates**
Cottons	X	X	
Minimum iron	X	X	
Delicates			X
Woollens	Liquid detergent for machine-washable woollens		
Automatic	X	X	
Shirts	X	X	
Express	X	X	
Denim		X[1)]	
Hygiene	X		
Dark garments		X[1)]	
Curtains	X[2)]	X[2)]	
Pillows	X[1)]	X[1)]	
Silks	Liquid detergent for machine-washable silk and woollens		
Sportswear	X	X	
Outerwear			X
Proofing	Only use proofing agents which are stated by the manufacturer as being "suitable for use on membrane textiles" as these consist of fluorochemical compounds. **Do not use** proofing agents which contain paraffin. Add proofing agents to compartment ❀.		
Starch	Liquid starch, starch formulations, viscous liquid starch, starch		

1) Only use liquid detergent

2) Only use powder detergent or detergent specifically designed for washing curtains

* Powder detergent, tablet detergent, liquid detergent and liquid tab detergent.

The right amount to dispense will depend on the following:

- The quantity of the laundry
- The soiling level of the laundry

  Lightly soiled
  No visible dirt or stains. Possibly slight body odour.

  Normally soiled
  Visibly dirty and/or just a few slight stains.

  Heavily soiled
  Stains and soiling clearly visible.
- The water hardness level.
  Check with your local water supplier if you do not know the hardness level in your area.

Water softener

A water softener can be used to cut down on the use of detergents in hard water areas. Dispense according to the amount specified on the packaging. First add detergent and then the water softener.

Miele branded water softening tablets are available from the Miele Spare Parts Department or via the internet on www.miele-shop.com.

Use a quantity of detergent as for soft water.

Miele do not recommend connecting the machine to a household water softener.

Washing with several components

If you wash using several components (e.g. special application detergents), we recommend always dispensing the agents into compartment in the following order:

1. Detergent
2. Water softener
3. Stain remover

This way the agents are distributed more evenly.

Fabric conditioners and liquid starch

Fabric conditioners make garments soft to handle and help prevent static cling when tumble drying.

Starch stiffens and gives body to items of laundry, e.g. shirts, tablecloths and bed linen.

Automatic dispensing of fabric conditioner or liquid starch to laundry at the end of a programme

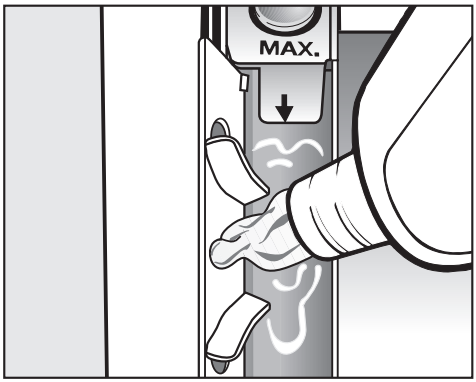

- Add the fabric conditioner or liquid starch to compartment ❀. **Do not exceed the maximum level mark.**

It will be automatically dispensed in the last rinse. At the end of the programme a small amount of water remains in the fabric conditioner compartment ❀.

If starching frequently, thoroughly clean the dispenser compartment, especially the siphon tube and fabric conditioner channel, regularly. See "Cleaning the detergent dispenser drawer". Do not use powder starch formulations or viscious liquid starch in the ❀ compartment as it will clog up. See below.

Adding fabric conditioner or starch separately

- Dispense in accordance with manufacturer's instructions on the packaging.
- Add powder or viscose starch to compartment ⊔.
- Add the fabric conditioner or liquid starch to compartment ❀.
- Turn the programme selector to *Starch*.
- Select a spin speed or the *Rinse hold* extra option.
- Press the *Start/Stop* button.

Colour run and dye removers/dyes

- Do not use colour run or dye removers in this machine.
- Dyes suitable for use in domestic washing machines can be used. However, please note that the salt used in the dyeing process can cause corrosion to stainless steel components in the machine if you dye frequently. Follow the manufacturer's instructions carefully.

⚠ Disconnect the machine from the mains electricity supply and withdraw the plug from the socket before cleaning the machine.

⚠ The washing machine must not be hosed down.

A range of Miele branded cleaning and conditioning agents are available to order from your Miele dealer, the Miele Spare Parts Department, or via the internet on www.miele-shop.com

External casing and fascia panel

Clean the casing using a Miele E-Cloth, or with a mild non-abrasive cleaning agent or soap and water using a well wrung-out cloth. Wipe dry with a soft cloth.

- The drum and any stainless steel outer panels can be cleaned using a suitable proprietary stainless-steel cleaning agent following the manufacturer's instructions on the packaging.

⚠ Do not use solvents, abrasive cleaners, glass cleaners or all-purpose cleaning agents. These might damage plastic surfaces and other components because of the chemicals they contain.

Extra cleaning

Carry out a hot wash (70°C or above) with powder detergent approx. every 6 weeks to help prevent deposits building up in the machine. These can occur when washing is mainly done at low temperatures, and also lead to unpleasant smells. If you have no reason to wash occasionally at this high temperature, then run a Cottons 95°C programme with detergent but no laundry at regular intervals.

Cleaning the detergent dispenser drawer

Remove detergent residues regularly.

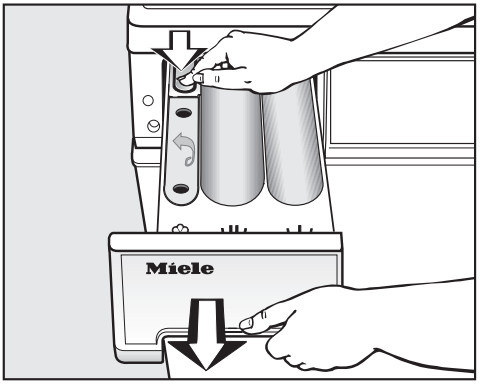

- Pull out the detergent dispenser drawer until a resistance is felt. Press down the release catch and at the same time pull the drawer right out of the machine.
- Clean the detergent drawer with warm water.

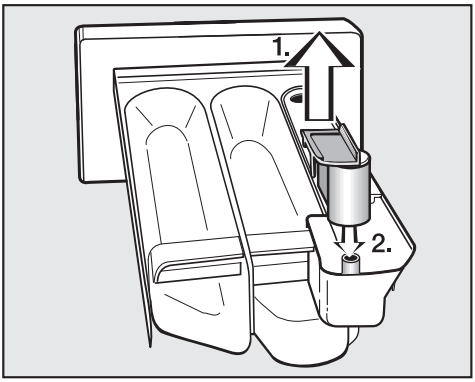

■ Clean the siphon.

1. Remove the siphon from compartment ❀ and rinse under warm running water. Clean the siphon tube in the same way.

2. Replace the siphon.

If starching frequently, thoroughly clean the siphon and siphon tube regularly. A build-up of starch will cause them to get clogged.

Cleaning the detergent dispenser drawer housing

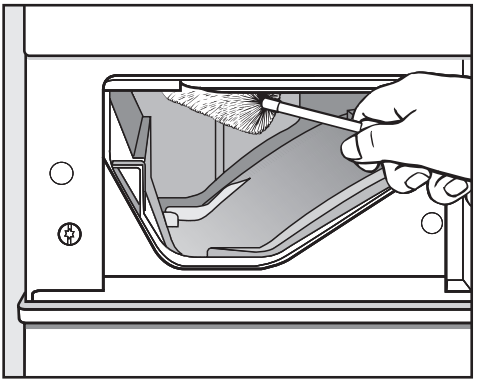

■ Use a bottle brush to remove detergent residues and limescale from the jets inside the detergent dispenser drawer housing.

Descaling the machine

If the correct amount of detergent is dispensed, the machine should not need to be descaled. If, however, you do wish to descale the machine only use proprietary non-corrosive descaling agents and strictly observe the instructions on the packaging.

Cleaning the filter in the water inlet

The washing machine has a filter to protect the water inlet valve.

The accessible filter in the union in the open end of the inlet hose should be checked every six months, or more often if there are frequent interruptions to the external water supply.

- First turn off the stopcock.
- Unscrew the threaded union connecting the free end of the inlet hose to the stopcock.

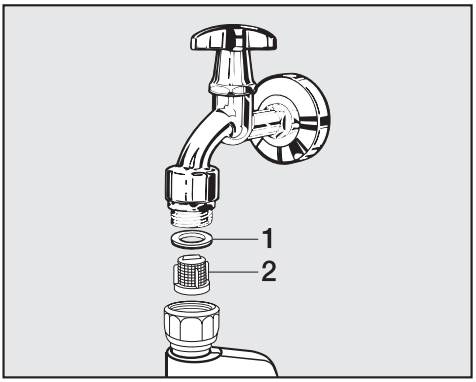

- Remove the rubber seal **1** from the recess.
- Using pointed pliers, take hold of the plastic filter bar **2** and remove.
- Clean the plastic filter.
- Put the filter and seal back in the reverse order and reconnect the hose.

Turn on the stopcock and check the connection is watertight. If water drips out, tighten the connection.

Never forget to put the filter back in place after cleaning.

With the help of the following notes, minor faults in the performance of the machine, some of which may result from incorrect operation, can be put right without contacting the Service Department.

⚠ Repair work to electrical appliances should only be carried out by a suitably qualified person in strict accordance with current local and national safety regulations. Repairs and other work by unqualified persons could be dangerous. The manufacturer cannot be held liable for unauthorised work.

The programme does not start

Problem	Possible cause	Remedy
The display remains dark and the programme selector is not lit up.	There is no power to the machine.	Check whether – the mains plug is plugged in and switched on. – the fuse or circuit breaker has tripped.
You are asked to enter a code.	Access via a code has been activated.	Enter the code and confirm the entry. Deactivate the code if you do not wish this message to appear in the display the next time the machine is switched on.
The display is dark.	The display has switched off automatically to save energy (Standby mode).	Press a button. Standby comes to an end.

Fault messages in the display

Problem	Possible cause	Remedy ❶
Fault Check drainage system	– The water outlet is blocked or restricted. – The drain hose has been fixed too high.	– Clean the drain filter and the drain pump. – The maximum delivery head is 1 m.
Fault Water intake Open stopcock	The water inlet is blocked or restricted.	Check whether – the stopcock is opened properly. – the inlet hose is kinked.
Waterproof system activated Close the stopcock	The water protection system has reacted.	Call the Service Department.
Technical fault. Call the Service Department	There is a fault.	Start the programme again. If the fault message appears again, contact the Service Department.
The following flashes in the display: Anti-crease **alternately with** Check detergent	Excessive foam has built up during washing.	Use less detergent next time and follow the manufacturer's instructions on dosage given on the packaging.

❶ To switch off the fault message: Switch the machine off with the *I-On/0-Off* button.

Problems with the load size indicator or calibrating to zero

Problem	Possible cause	Remedy
The display indicates a load of <25% or no load size is indicated when the drum is full.	There was already laundry in the drum when the machine was switched on. This has decalibrated the sensor from the zero setting.	■ To recalibrate the sensor to the zero setting: – Remove the laundry from the drum. – Switch off the washing machine and leave the door open. – Switch on the washing machine. – Turn the programme selector to the *Cottons* position. – Press and hold the *Load/Detergent* button pressed in until the following message appears in the display: Zero setting OK.
The display indicates a load of 25%, 50%, 75% or 100% when the drum is empty	The load size sensor has been decalibrated from the zero setting.	Rotate the drum once. If the display still indicates a load of 25%, 50%, 75% or 100%, recalibrate the sensor to zero again (see above section).
The fault message: Zero setting not possible **appears in the display.**	The drum door is closed.	– Open the drum door. – Switch off the washing machine and leave the door open. – Switch on the washing machine. – Try and recalibrate to zero again.

General problems

Problem	Possible cause	Remedy
The machine shakes during the spin cycle.	The machine feet are not level.	Level the machine (see "Installation).
The laundry has not been spun properly and is still wet.	The machine detected an imbalance during the final spin and reduced the spin speed automatically.	Include both large and small items in the load as this will give better distribution.
The laundry has not been spun satisfactorily.	The spin speed selected was too low.	Select a higher spin speed next time.
The pump makes strange noises.	This is not a fault! These noises occur at the end of a pump sequence as a normal part of the operation.	
There is a lot of detergent residue in the detergent drawer.	The water pressure is too low.	– Clean the water inlet filter. – Select Water plus.
	Powder detergent used with water softeners can be sticky.	Add washing powder and then add the water softener.
Fabric conditioner is not completely dispensed or too much water remains in the ❀ compartment.	The siphon tube is not correctly positioned, or is clogged up.	Clean the siphon, (see “Cleaning and care" - "Cleaning the detergent dispenser drawer”).
The display is in a different language.	A different language has been selected in *Settings Language* ⚑.	Set the language you want. The flag symbol will guide you.
When laundry is dry it feels hard to the touch.	Too vigorous wash action.	Programme in gentle action and more water.
	Not enough detergent used.	Increase detergent dose to prevent limescale build up in laundry.
	No fabric conditioner used.	Use fabric conditioner in last rinse.

An unsatisfactory wash result

Problem	Possible cause	Remedy
Liquid detergent does not give the required result.	Liquid detergents usually contain no bleaching agents. They do not remove fruit, coffee and tea stains.	– Use a general purpose detergent containing a bleaching agent. – Pour stain removers into compartment ⅢI of the dispenser drawer and liquid detergent into a dispenser ball. – Never put stain removers and liquid detergent together in the dispenser drawer.
Grey, greasy particles cling to washed laundry.	Insufficient amounts of detergent were used to break down the particles of grease in heavily soiled laundry.	– Use more detergent. – Before washing the next load run a *Cottons 95°C* programme with powder detergent but without a load.
A stale smell is in the drum and on laundry.	Low temperature washing.	– Before washing the next load run a *Cottons 95°C* programme with powder detergent but without a load.
White residues which look like powder detergent are seen on dark textiles after washing.	The detergent contained compounds (zeolites) to aid water softening which are not soluble in water. They have ended up on the laundry.	– Try and brush off the residues with a soft brush once the laundry is dry. – Wash dark textiles using a detergent which contains no zeolites. Liquid detergents usually contain no zeolites. – Use the *Dark garments* programme.
Clothes are coming out creased.	Programme was overloaded.	– Reduce quantity of clothes in drum.
	The wrong programme was used.	– Check care labels and the programme chart. – Use easy iron conditioners.

The door will not open	
Possible cause	**Remedy**
The machine is not connected to the electricity supply and/or is not switched on.	Insert the plug in the socket and switch on and/or switch the machine on with the *I-On/0-Off* button.
The safety lock has been activated.	Deactivate the safety lock as described in "Changing the programme sequence - Safety lock".
Access via a code has been activated.	Deactivate the code as described in "Settings menu".
Power cut.	Open the drum door as described in the next section.
The door was not correctly engaged.	Press hard against the lock side of the drum door and then press the *Door* button.
There is still water in the drum and the machine is unable to drain.	Clean the drain filter and drain pump as described in the next section.
For safety reasons the drum door cannot be opened if the suds temperature is higher than 55°C.	

Opening the drum door in the event of a blocked drain outlet and/or power failure

■ Switch the washing machine off.

There is a lever behind the detergent drawer fascia panel.

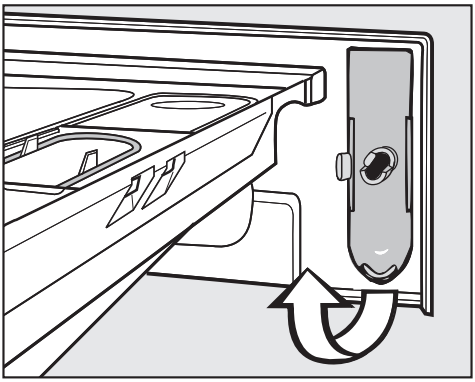

■ Remove the lever.

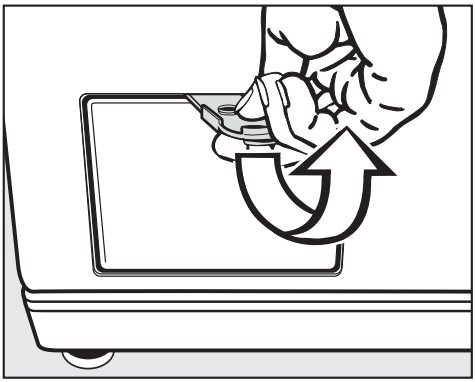

■ Use it to open the access flap.

Blocked drain outlet

If the drain outlet is blocked, up to 25 litres of water will be retained in the machine.

⚠ Caution: if laundry has been washed at a high temperature, water draining out of the machine will still be hot. Danger of scalding!

Procedure for draining the machine

■ Place a suitable container under the access flap.

When draining water from the machine, do **not** unscrew the drain filter completely or take it right out.

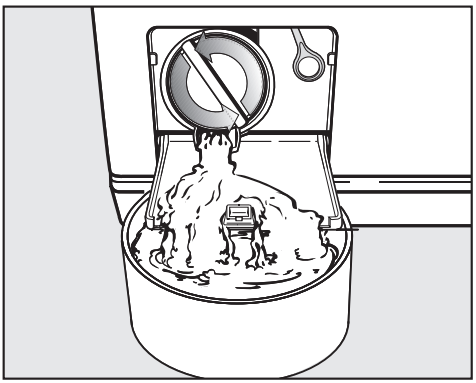

■ Unscrew the drain filter lid until water runs out.

To interrupt the flow of water:

■ Tighten the drain filter back up again.

Once the flow of water ceases:

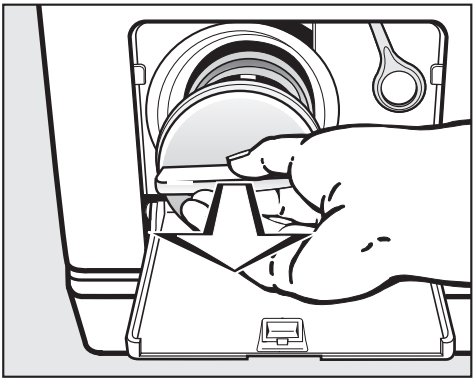

- Remove the drain filter completely.
- Clean it thoroughly.

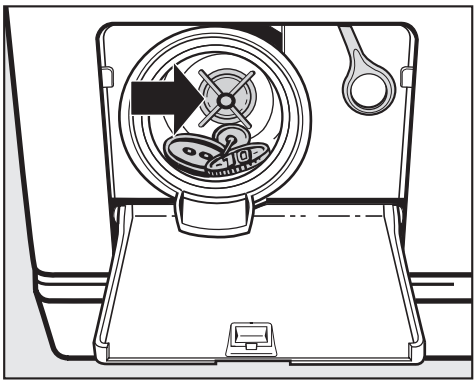

- Remove any foreign objects (e.g. buttons, coins, etc.) and fluff from the filter housing. Turn the impeller by hand to check that it rotates freely. Any foreign object causing an obstruction should be removed.
- Put the drain filter back in place and secure.

⚠ Make sure the drain filter is securely tightened. Otherwise there is a risk of water leakage during use.

Opening the drum door

⚠ Always make sure that the drum is stationary before reaching into the machine to remove laundry. Reaching into a moving drum is extremely dangerous.

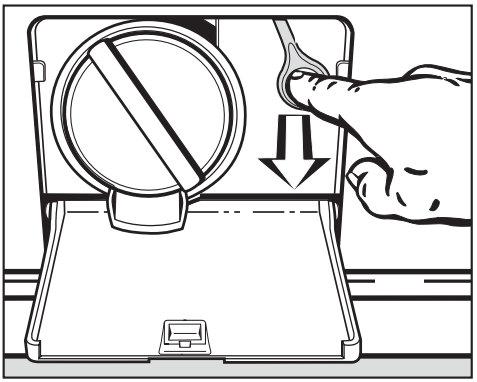

- Pull the emergency release downwards (see illustration). The drum door will open.

In the event of any faults which you cannot remedy yourself, please contact:

- your Miele Dealer or
- the Miele Customer Contact Centre (see back cover for contact details).

When contacting your Dealer or Miele, please quote the model and serial number of your machine, both of which are shown on the data plate visible above the porthole glass when the door is open.

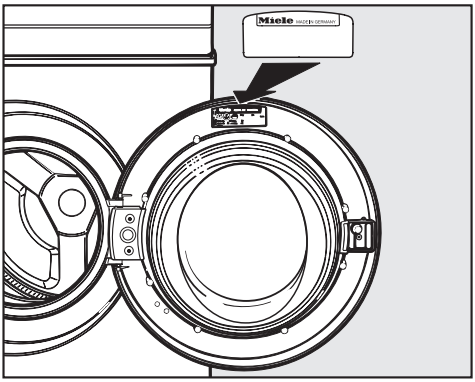

Future updates (PC)

The indicator light marked PC is the interface used by Miele service technicians during servicing work for testing purposes and for updating the machine's programme data.

Appliance guarantee

Please see the guarantee card supplied with your machine.

Optional accessories

Optional accessories for this washing machine are available from your Miele Dealer, the Miele Spare Parts Department or via the internet at www.miele-shop.com.

Please note that telephone calls may be monitored and recorded for training purposes.

Front view

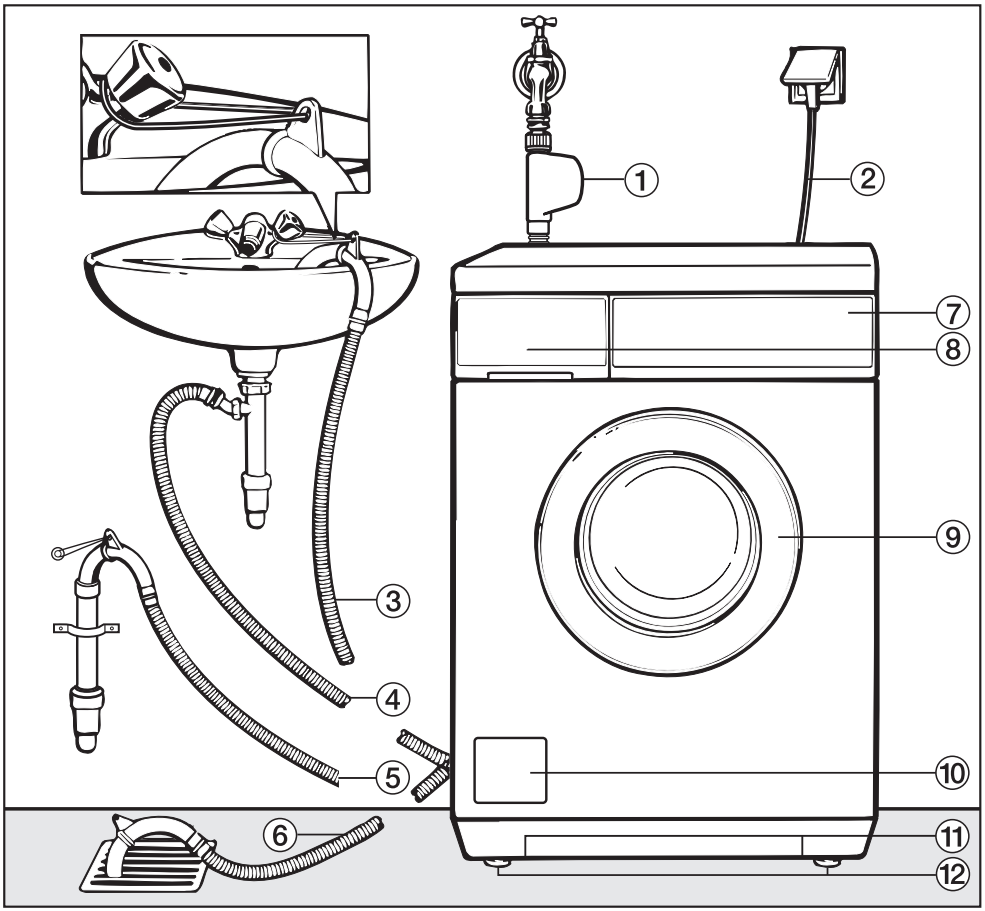

① Inlet hose with "Waterproof" system

② Electricity supply cable

③ - ⑥ Flexible drain hose (with detachable swivel elbow)

⑦ Control panel

⑧ Detergent dispenser drawer

⑨ Drum door

⑩ Access to drain filter, drain pump and emergency release

⑪ Handle recesses for moving the machine

⑫ Four height adjustable feet

Rear view

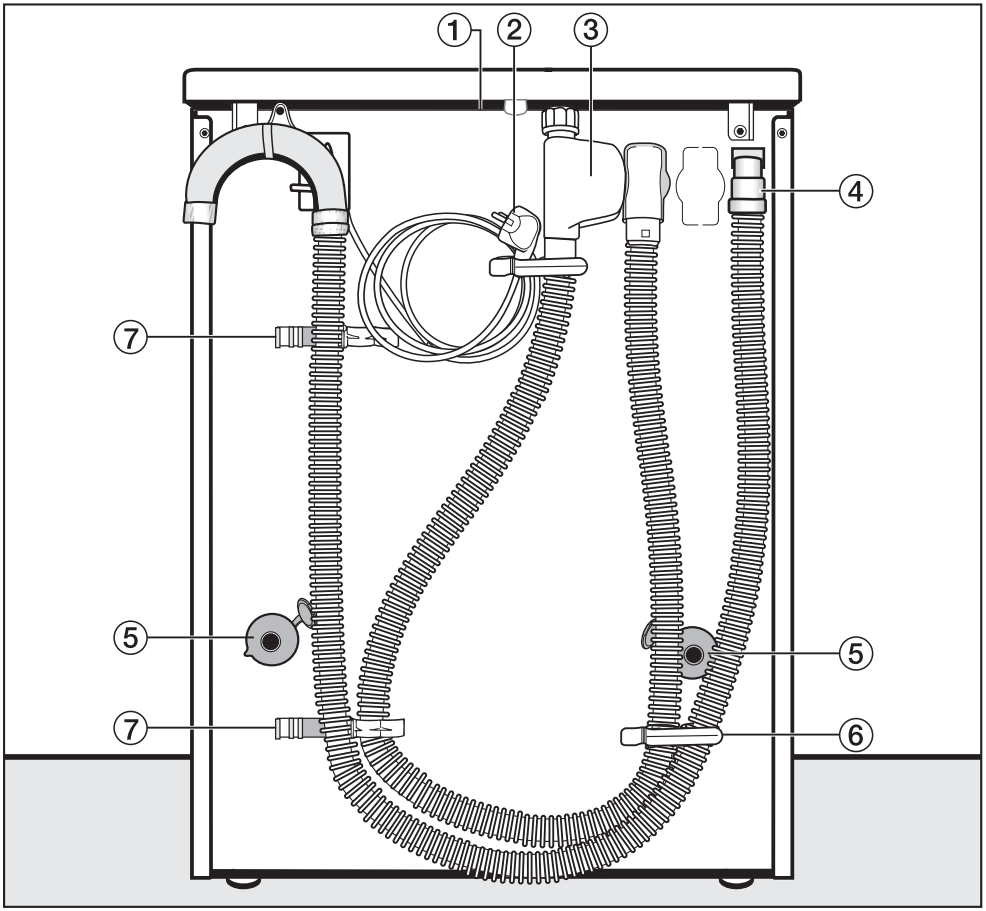

① Protruding lid for holding when moving the machine

② Electricity supply cable

③ Inlet hose with "Waterproof" system

④ Drain hose

⑤ Transit bar covers

⑥ Restraining clip for inlet hose and drain hose

⑦ Restraining clips for transit bars when removed

Installation surface

A concrete floor is the most suitable installation surface for a washing machine, being far less prone to vibration during the spin cycle than wooden floorboards or a carpeted surface.

Please note the following points:

- The machine must be level and securely positioned.
- To avoid vibrations during spinning, the machine should not be installed on soft floor coverings.

If installing on a wooden joist floor:

- We recommend a plywood base (at least 59x52x3 cm). The base should span several joists and be bolted to the joists and not only to the floorboards. Check for the presence of pipes and cables.

If possible, install the machine in a corner, as this is usually the most stable part of the floor.

⚠ If the machine is installed on a raised plinth, it **has to be secured** against slippage during spinning using retaining clips (available from the Miele Spare Parts Dept).

Installing the washing machine

To manoeuvre the machine out of its packing case to its installation site hold it by the edge of the lid where it protrudes to the rear of the washing machine as well as by the handle recesses at the front.

⚠ Ensure that the machine feet and the floor are dry to prevent the machine from slipping during the spin cycle.

Removing the transit bars

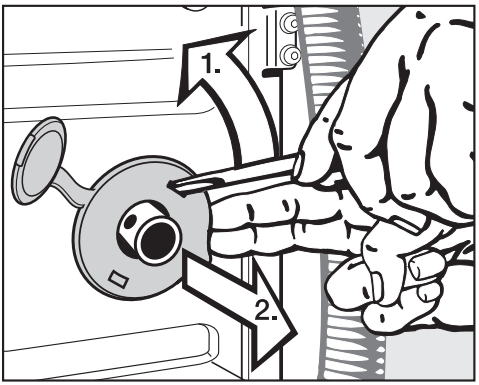

- To remove the left and right covers

1. Use a screwdriver to prise out the cover as illustrated.

2. Pull the cover forwards to remove.

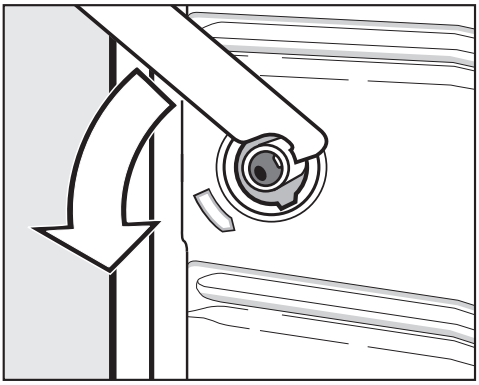

■ Using the spanner supplied turn the left-hand transit bar 90°, then

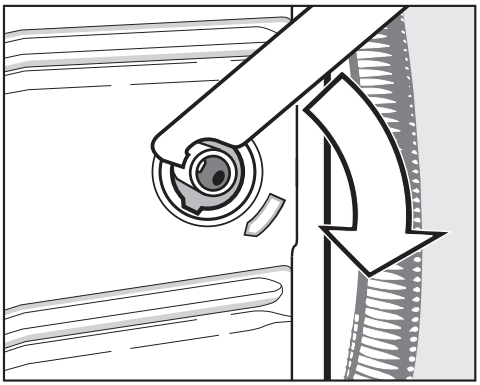

■ Turn the right-hand transit bar 90°, then

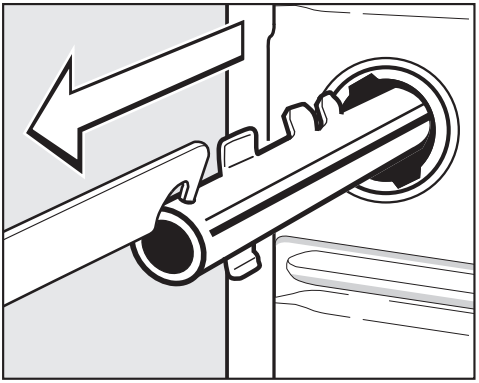

■ withdraw the transit bar.

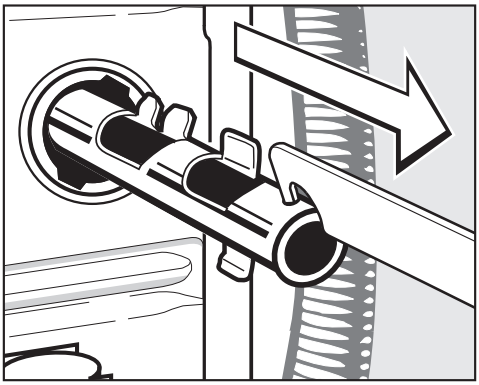

■ withdraw the transit bar.

⚠ To avoid the risk of injury the holes for the transit bars must be covered after the transit bars have been removed.

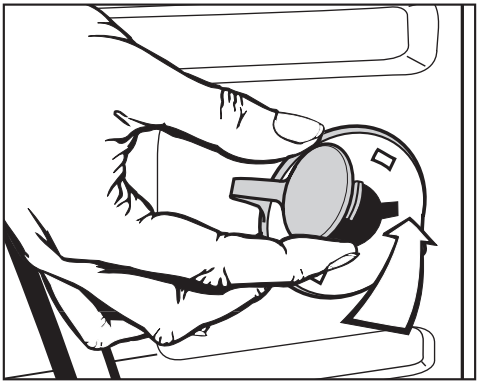

■ Fit the covers on to the two holes. Then plug the holes as shown with the caps.

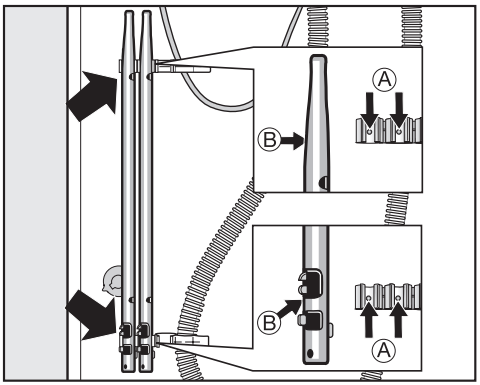

■ Secure the transit bars to the back of the washing machine. Make sure that holes Ⓑ are fitted over retainers Ⓐ.

⚠ The washing machine must not be moved without the transit bars in place.
Store the transit bars as shown or keep them in a safe place for future use. They must be re-fitted if the machine is to be moved again (e.g.when moving house).

Re-fitting the transit bars

Re-fitting is carried out by reversing the procedure.

Levelling the machine

The machine must stand perfectly level on all four feet to ensure safe and proper operation.

Incorrect installation may increase electricity and water consumption and may cause the machine to move about.

Screwing out and adjusting the feet

The four adjustable screw feet are used to level the machine. All four feet are screwed in when the machine is delivered.

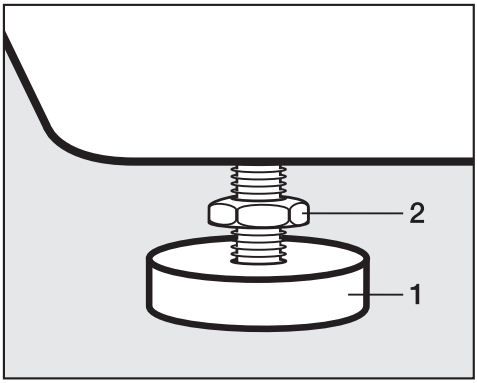

- Using the spanner supplied turn counter nut **2** in a clockwise direction. Then turn counter nut **2** together with foot **1** to unscrew.

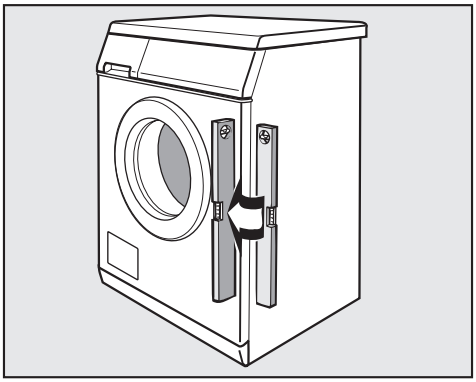

- Use a spirit level to check the machine is standing level.
- Hold foot **1** securely with a pipe wrench. Turn counter nut **2** again using the spanner supplied until it sits firmly up against the housing.

⚠ All four counternuts must be firmly up against the housing. Please also check this for the feet which did not need adjustment. Otherwise there is the danger of the machine moving about.

The fitting of building under kits and stacking kits must only be undertaken by qualified and competent persons, in accordance with the instructions supplied with the kit.

Building under a continuous worktop/in a kitchen run

If you wish to push your machine under a worktop and there is space to do this **without removing the lid**, the conversion kit is not necessary. Otherwise the conversion kit is essential.

- A special building under conversion kit* is required.
  To ensure electrical safety, the washing machine lid must be replaced by the cover plate supplied with the conversion kit.
- For installation under a work surface 900/910 mm from the floor, a raising kit* is required.
- Connections for electricity, water and drainage should be installed in such a way that they remain accessible when the machine is in place.

Fitting instructions are supplied with the conversion kit.

All parts marked* are available from your Dealer or the Miele Spare Parts Department.

Washer and Dryer stack

A Miele tumble dryer can be stacked with the washing machine. A "WTV" stacking kit* is necessary and can be purchased from the Miele Spare Parts Department or via the internet at www.miele-shop.com.

Please note

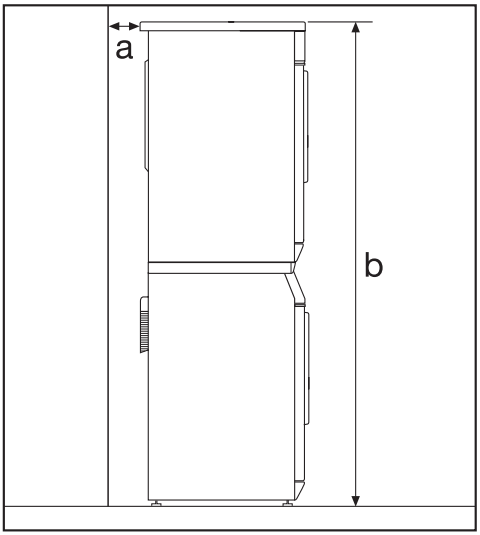

a Safety distance to wall:
at least 2 cm

b Height:
Stacking kit with pull-out shelf:
approx. 169 cm
Stacking kit without pull-out shelf:
approx. 170 cm

Replacing the lid

If the lid has been removed in order to fit a stacking kit or cover plate, ensure that, if the lid is replaced, it fits securely into the rear holders. Otherwise, it is not properly secure for transport.

The Miele Waterproof system

The Miele Waterproof system protects the washing machine from water damage.

The system consists of three main components:

1) the inlet hose

2) the electronic unit and the washing machine housing

3) the drain hose

1) Inlet hose

– The inlet hose is fitted with an additional electrical safety valve which works like an automatic stopcock and is housed in the inlet hose connection box.

– It is pressure tested to between 7,000 and 10,000 kPa.

– The inlet hose has a protective sleeve.

  Any leaking water from the inlet hose is fed into the sump through this protective sleeve. A float switches off the safety valve, preventing any more water from flowing into the machine and water in the suds container is pumped away.

2) Electronic unit and washing machine housing

– Sump

  Any leaking water is collected in a sump in the base of the machine. A float switches off the safety valves, preventing any more water from flowing into the machine and water in the suds container is pumped away.

– Overflow protection

  This prevents the washing machine taking in too much water. If the water level exceeds a certain level, the drain pump switches in and pumps the excess water away.

3) Drain hose

The drain hose is protected by a ventilation system which prevents the washing machine from being emptied completely.

Connection to the water supply

⚠ The plastic casing of the safety valve contains electrical components. The Waterproof system must only be connected to its own stopcock. It must not be connected to mixer taps or similar and must not be fitted in areas where there is the risk of water or other liquids reaching it.

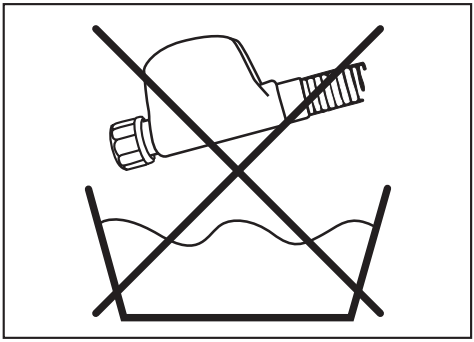

Do not get wet.

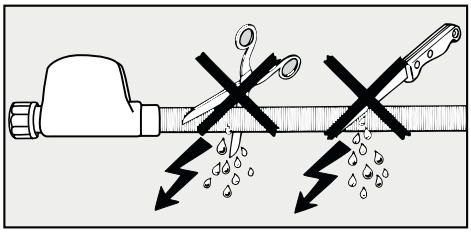

The protective sleeve of the hose must not be damaged or kinked.

The machine should be connected to the mains water supply in accordance with local and national safety regulations. The German authorities do not require it to have a non-return valve as the washing machine has been designed to comply with DIN regulations.

The machine is designed to operate with a flow pressure of between 100 and 1,000 kPa (1-10 bar). If it is higher than 1,000 kPa it is essential to fit a pressure reducing valve.

Connection to the mains water supply should incorporate a mains stopcock with $^{3}/_{4}$" thread. The stopcock should be fitted by a qualified plumber.

⚠ The connection point is subject to mains water pressure. Turn on the stopcock slowly and check for leaks. Correct the position of the washer and union if appropriate.

The washing machine is **not** suitable for connection to a hot water supply and connection to a household water softener is not recommended.

Maintenance and care

If you intend to unscrew the Miele Waterproof system hose from the stopcock it is essential to disconnect the machine from the electricity supply first.

Only use a **Miele Waterproof system** hose should you need a replacement.

In order to protect the water inlet valve, the dirt filter in the water inlet valve connection must not be removed.

Extension hose

A 1.5 metre long (metal) extension hose is available from your Miele dealer or the Miele Spare Parts Department as an optional extra.

This hose is tested to withstand pressures of up to 14,000 kPa and can be used as a flexible extension to the water supply.

N.B. Using this hose renders the Waterproof system safety valve on the inlet hose ineffective.

Connection to the drainage system

The machine drains via a drain pump with a delivery head of 1 metre*. The drain hose must not be kinked as this restricts drainage. The swivel elbow at the end of the hose can be turned in either direction, or can be detached if required, with a sharp twist and pull.

If required, the drain hose can be extended to a length of 5 m. The necessary parts can purchased from the Miele Spare Parts Department or your Miele dealer.

* For a delivery head of more than 1 m (up to a max. of 1.8 m) a replacement drain pump will need to be fitted. Please contact the Miele Spare Parts Department or your Miele Dealer.

Drain hose connection:

1. Direct into a sink or basin:

Please note the following:

– Hook the hose over the edge and secure.

– Make sure that the water can drain away freely without hindrance. Otherwise there is a risk of water overflowing or of some of the drained water being sucked back into the machine.

2. Connected securely to a plastic drain pipe with a rubber nipple. There is no need to use a non-return valve.

3. Connected securely to a standpipe.

4. Connected securely to a floor gully.

Please note:

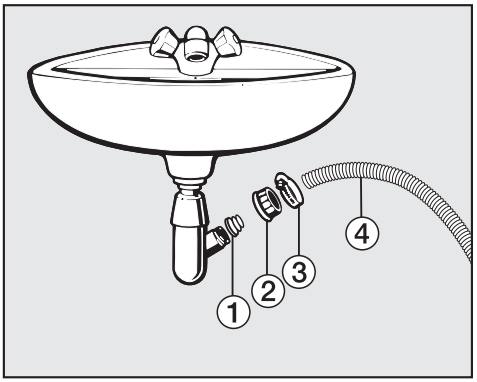

① Adapter

② Nut

③ Hose clip

④ End of the hose

- Fit adapter ① to the sink drain outlet using nut ②.
- Attach the end of the hose ④ to adapter ①.
- Use a screwdriver to tighten hose clip ③ up close to the nut.

Electrical connection U.K.

All electrical work should be carried out by a suitably qualified and competent person, in strict accordance with current national and local safety regulations (BS 7671 in the UK).

Ensure power is not supplied to the appliance until after installation work has been carried out.

The appliance is supplied with a mains cable with moulded plug ready for connection to a 230-240V mains supply.

Please ensure the connection data quoted on the data plate match the household mains supply.

Connection should be made via a suitable switched socket which is easily accessible after installation.

For extra safety it is advisable to install a suitable residual current device (RCD). Contact a qualified electrician for advice.

Do not connect via an extension lead. Extension leads do not guarantee the required safety of the appliance (e.g. danger of overheating).

Non-rewireable plugs BS 1363

The fuse cover must be refitted when changing the fuse, and if the fuse cover is lost, the plug must not be used until a suitable replacement is obtained. The colour of the correct replacement cover is that of the coloured insert in the base of the plug, or the colour that is embossed in words on the base of the plug (as applicable to the design of plug fitted).

Replacement fuses should be ASTA approved to BS 1362 and have the correct rating. Replacement fuses and fuse covers may be purchased from your local electrical supplier.

WARNING: THIS APPLIANCE MUST BE EARTHED

Consumption data

		Load	Consumption data			
			Energy	Water	Duration	
			in kWh	in litres	Short	Normal
Cottons	95°C	6.0 kg	1.99	47		2 h 09 min
	60°C[1)]	6.0 kg	1.02	47		1 h 49 min
	60°C	3.0 kg	0.73	39	1 h 03 min	
	40°C[1)]	6.0 kg	0.65	59		2 h 04 min
	40°C[2)]	3.0 kg	0.36	39	59 min	
Minimum iron	40°C[1)]	3.0 kg	0.50	55	59 min	1 h 19 min
Delicates	30°C	2.0 kg	0.35	69	49 min	59 min
Woollens	30°C	2.0 kg	0.23	39	–	39 min
Automatic	40°C	3.5 kg	0.35 - 0.50	40-55	–	1 h 18 min
Shirts	60°C	2.0 kg	1.00	59	1 h 02 min	1 h 12 min
Express	40°C	3.0 kg	0.30	34	–	30 min
Denim	40°C	3.0 kg	0.50	52	50 min	1 h 00 min
Hygiene	60°C	6.0 kg	1.40	55	–	2 h 20 min
Dark garments	40°C	3.0 kg	0.60	60	1 h 05 min	1 h 15 min
Curtains	40°C	2.0 kg	0.45	38	–	55 min
Pillows	60°C	1 pillow	0.80	44	–	1 h 20 min
Silks	30°C	1.0 kg	0.25	39	–	36 min
Sportswear	40°C	2.0 kg	0.35	35	47 min	1 h 07min
Outerwear	40°C	2.0 kg	0.45	59	53 min	1 h 03 min
Proofing	40°C	2.0 kg	0.30	12	–	29 min

Notes for test institutes:

1) EN 60456 test programme

2) Short programme for test institutes; the *Short* extra option must be selected.

Consumption data can vary from the nominal values given depending on water pressure, water hardness, water inlet temperature, room temperature, type and volume of load, fluctuations in the electricity supply and any extra options selected.

Height	850 mm
Width	595 mm
Depth	580 mm
Depth with door open	975 mm
Height for building under	820 mm
Width for building under	600 mm
Depth for building under	600 mm
Weight	94 kg
Maximum floor load	1600 Newton (approx. 160 kg)
Capacity	6 kg dry laundry
Voltage	see data plate
Connected load	see data plate
Fuse rating	see data plate / plug
Consumption data	see "Consumption data"
Water flow pressure minimum	100 kPa (1 bar)
Water flow pressure maximum	1000 kPa (10 bar)
Inlet hose length	1.60 m
Drain hose length	1.50 m
Mains connection cable length	1.60 m
Delivery head max.	1.00 m
Maximum drainage length	5.00 m
LEDs	Class 1
Test certificates awarded	see data plate

Settings menu
for changing default settings

The Settings menu can be used to alter the machine's electronics to suit changing requirements.
Settings can be altered at any time.

To open the Settings menu

- Connect the machine to the electricity supply.
- Switch on the washing machine.
- Press both menu buttons at the same time until the following appears in the display:

You are now in the *Settings* menu.

- Select the setting you want with the left hand *Menu* button under **Continue**, and confirm your selection with the right hand *Menu* button under **OK**.

Language

The display can be set to appear in one of several different languages.

You can select the language you want via the Language sub-menu.

The flag after the word *Language* acts as a guide to prevent a language which will not be understood from being set.

A tick ✓ will appear beside the language to show that it has been set.

Time (of day)

First select either a 24 hour or 12 hour clock. You can then set the current time of day.

Clock format

- Select the clock format you want with the left hand *Menu* button under **Continue**, and confirm your selection with the right hand *Menu* button under **OK**.

Set the time of day

- Select the *Set the time of day* sub-menu and use the *Menu* buttons to set the time.

Gentle action

Activating gentle action reduces the drum action and is suitable for washing slightly soiled items more gently. It should be activated for garments with a single bar under the care label and for articles which feel too hard after they have been dried.

Gentle action can be activated for the *Cottons* and the *Minimum iron* programmes.

The machine is delivered with the Gentle action setting deactivated.

A tick ✓ will appear beside the option to show that it has been set.

Longer pre-wash

The pre-wash for the *Cottons* programme can be extended by 6, 9 or 12 minutes.

The default setting for the pre-wash is 25 minutes.

If you require a longer pre-wash, it can be extended.

A tick ✓ will appear beside the option to show that it has been set.

Suds cooling

When this is activated, additional water flows into the drum at the end of the main wash to cool the suds down. Hot suds can damage plastic drainage pipes.

Suds cooling takes place when temperatures of 95°C and 75°C are selected.

Suds cooling should be activated:

– to prevent the danger of scalding if the drain hose is hooked over the edge of a sink or basin.

– where the drainage pipes do not comply with DIN 1986.

The machine is delivered with Suds cooling deactivated.

A tick ✓ will appear beside the option to show that it has been set.

Lock code

The code prevents your machine being used without your knowledge.

When the code has been activated, you have to enter a code after switching the washing machine on. Otherwise the washing machine cannot be operated.

To activate the Lock code

- Press the right hand *Menu* button under **OK**.
- The display will now request that a code is entered. The code is **125** and cannot be altered.

To enter the Lock code

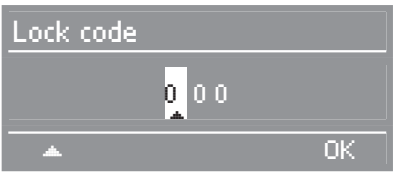

- Enter the first number with the left hand *Menu* button under ▲. Confirm your selection of this number by pressing the right hand *Menu* button under **OK**. Now enter the second number.
- Repeat the process until all three numbers have been entered.

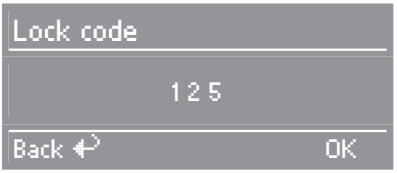

- Confirm the code by pressing the right hand *Menu* button under **OK** or, if you have made a mistake, press the left hand *Menu* button under **Back** ↩.

The following will appear in the display:

Once the machine is switched off, it can only be used again if the code is entered.

To use the washing machine when the code is activated

When the machine is switched on again, the display will request the code.

- Enter code 125 as described above and confirm the entry.

The washing machine is now unlocked and ready for use.

To deactivate the Lock code

Proceed as for activating the code.

Temperature unit

You can chose for the temperature to be displayed in *°C/Celsius* or *°F/Fahrenheit*.

A tick ✓ will appear beside the option to show that it has been set.

Buzzer

An audible tone sounds repeatedly at the end of a programme and when Rinse hold is reached.

There are two volumes:

Off

(default setting)

The buzzer is switched off.

Normal

The buzzer sounds at the end of a programme or when Rinse hold is reached.

Loud

The buzzer sounds at maximum volume *Loud* at the end of a programme or when Rinse hold is reached.

A tick ✓ will appear beside the option to show that it has been set.

Keypad tone

An audible tone sounds each time a button is pressed.

The machine is delivered with the keypad tone switched off.

A tick ✓ will appear beside the option to show that it has been set.

Brightness

There are ten different display brightness settings.

The machine is delivered with the display brightness on setting 5.

This will change as soon as a different setting is chosen.

Contrast

There are ten different display contrast settings.

The machine is delivered with the display contrast on setting 5.

This will change as soon as a different setting is chosen.

Standby display

To save energy, the display goes out and the indicator light for the *Start/Stop* button will start flashing slowly.

The display will always go out,

- if a programme is not selected within 10 minutes of the machine being switched on.
- 10 minutes after the end of a programme.

Pressing one of the buttons switches the display back on again.

You can also choose whether you want the display to go out 10 minutes after a programme has started or to remain visible throughout the programme.

On

The standby function is switched on. When this option is selected, the display will go out 10 minutes after a programme has started.

Not in current programme

(the machine is delivered with this option selected)

The standby function is switched off. The display will remain visible during a programme.

Memory

If an extra option has been selected for a programme, or the recommended temperature or spin speed has been altered, the machine will store the changes in memory at the start of a programme.

When this programme is chosen again these settings will appear in the display.

The machine is delivered with the memory function deactivated.

Anti-crease

Anti-crease helps prevent creasing if laundry is not normally removed immediately after the end of a programme.

The drum will turn at intervals for up to 30 minutes after the programme has finished. The door can be opened and laundry removed at any time during the anti-crease phase.

On

(the machine is delivered with this option selected)

Anti-crease is activated.

Off

Anti-crease is deactivated.

To close the Settings menu

- Press the right hand *Menu* button under **OK**.

Miele washing machines offer perfect care for your laundry and feature a wide range of special programmes designed to suit the fabric being washed. And now Miele have developed a range of specialist CareCollection detergents and conditioning products to offer you a complete package for cleaning and caring for your laundry.

The Miele CareCollection detergents and conditioning products are listed below. You can order these and many other useful products via the internet at:

All the products can also be ordered via the Miele Customer Contact Centre (see back cover for contact details).

CareCollection

Miele specialist detergents

"Outdoor wear"

This specialist detergent will clean your water-repellent outerwear with care.

"Sportswear"

The Miele Sportswear detergent is designed to clean sportswear whilst taking care of the special microfibres used in these garments. It will help to neutralise and remove odours whilst protecting the colour of the fabric and preventing static build-up.

"Down Items"

This special-purpose detergent contains a mild tenside and has been specially formulated to keep down-filled items supple and to give them bounce.

Miele proofing agent

This special finishing agent reproofs garments against wind and water and provides a dirt-repellent finish whilst retaining elasticity and breathability.

"UltraWhite" detergent

This multi-purpose powder detergent has excellent stain removal properties and is suitable for white and light coloured laundry as well as heavily soiled coloured items.

"UltraColor" detergent for coloured garments

This liquid detergent is particularly suitable for cleaning coloured and dark garments. The special formulation offers effective stain removal, even at low temperatures, while helping to prevent colours fading.

Liquid detergent "For Delicates"

This liquid detergent is ideal for the gentle treatment of delicate fabrics, such as wool and silk. Its special formulation cleans effectively at temperatures as low as 20°C, while protecting the colour of your delicate garments.

Fabric conditioner

The Miele fabric conditioner will give your laundry a fresh, natural fragrance. It makes garments soft to handle and prevents static build-up during tumble drying.

United Kingdom
Miele Co. Ltd.
Fairacres, Marcham Road
Abingdon, Oxon, OX14 1TW
Tel: (01235) 554455
Fax: (01235) 554477
Customer Contact Centre Tel: (08707) 554466
E-mail: info@miele.co.uk
Internet: www.miele.co.uk

Australia
Miele Australia Pty. Ltd.
ABN 96 005 635 398
1 Gilbert Park Drive, Knoxfield, VIC 3180
Tel: (03) 9764 7130
Fax: (03) 9764 7149
Internet: www.miele.com.au

China
Miele Shanghai
Suite 4105-06, Plaza 66
1266 Nanjing Road West
Jing An District
Shanghai 200040, PRC
Tel: +86 21 6288 4200
Fax: +86 21 6288 4100
E-mail: mieleshanghai@cn.miele.com
Internet: www.miele.cn

Hong Kong
Miele (Hong Kong) Limited
AIA Plaza, 24th Floor
18 Hysan Avenue
Causeway Bay
Tel: +852- 2610-1331
Fax: +852-2610-1013
E-mail: mielehk@miele.com.hk
Internet: www.miele.hk

Ireland
Miele Ireland Ltd.
Broomhill Road, Tallaght, Dublin 24
Tel: (01) 461 0710
Fax: (01) 461 07 97
E-Mail: info@miele.ie
Internet: www.miele.ie

New Zealand
Miele New Zealand Limited
Unit L, 10-20 Sylvia Park Road
Mt. Wellington, 1060, Auckland, NZ
Tel: 0800 264 353
Fax: 0800 463 453
Internet: www.miele.co.nz

South Africa
Miele (Pty) Ltd
63 Peter Place, Bryanston 2194
P.O. Box 69434, Bryanston 2021
Tel: +27 (0) 11 548-1900
Fax: +27 (0) 11 548-1935
E-mail: info@miele.co.za
Internet: www.miele.co.za

Singapore
Miele Southeast Asia
Miele Pte. Ltd.
163 Penang Road
04 - 02/03 Winsland House II
Singapore 238463
Tel: +65 6735 1191
Fax: +65 6735 1161
E-Mail: infosea@miele.com.sg
Internet: www.miele.sg

United Arab Emirates
Miele Appliances Ltd.
P.O. Box 11 47 82
Gold & Diamond Park
Sheikh Zayed Road
Building 6 / Offices Nos. 6-214 to 6-220
Dubai
Tel: +971-4-341 84 44
Fax: +971-4-341 88 52
E-Mail: info@miele.ae
Internet: www.miele.ae

Alteration rights reserved/0309/W 3923 WPS

M.-Nr. 07 170 860 / 02

CE