Miele
PROFESSIONAL

Operating Instructions

Laboratory Glasswasher G 7783 MIELABOR

It is **essential** to read these operating instructions before installing or using the machine, to avoid the risk of accident or damage to the machine.

GB AUS

M.-Nr. 03 885 802

Contents

Guide to the machine 3
Warning and safety instructions 5
Warning and safety instructions (detachable) . . . . . Centre pages
Description of the machine 9
Setting the water softener 10
Opening and closing the door 12
Applications and loading 13
Rinsing agent 17
– Setting the dosage 17
Adding neutralising agent 18
Liquid dispensing system venting / Maintenance 19
Adding powder detergent 20
Programme selection 21
Programme chart 22
Switching the machine on and off 24
– Selecting a programme 24
– Selecting an additional programme 24
– Programme sequence indicator 25
– Interrupting a programme 25
Programming special functions 26
Reactivating the water softener 28
Cleaning and care 30
Correcting minor faults 32
Installation 33
Electrical connection U.K./AUS 35
Plumbing 37
Caring for the environment 40
Technical data 41

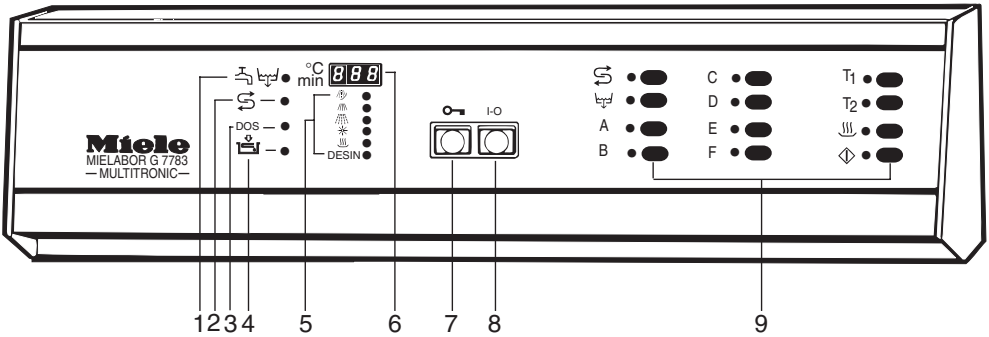

1 “Check water inlet/outlet” indicator light

2 “Reactivate softener” indicator light

3 “Add liquid detergent” indicator light (only with externally connected DOS-Module –special version–)

4 “Add neutralising agent” indicator light

5 Programme sequence indicator

6 Display field

7 Door release

8 On-Off button (I-0)

9 Programme selectors

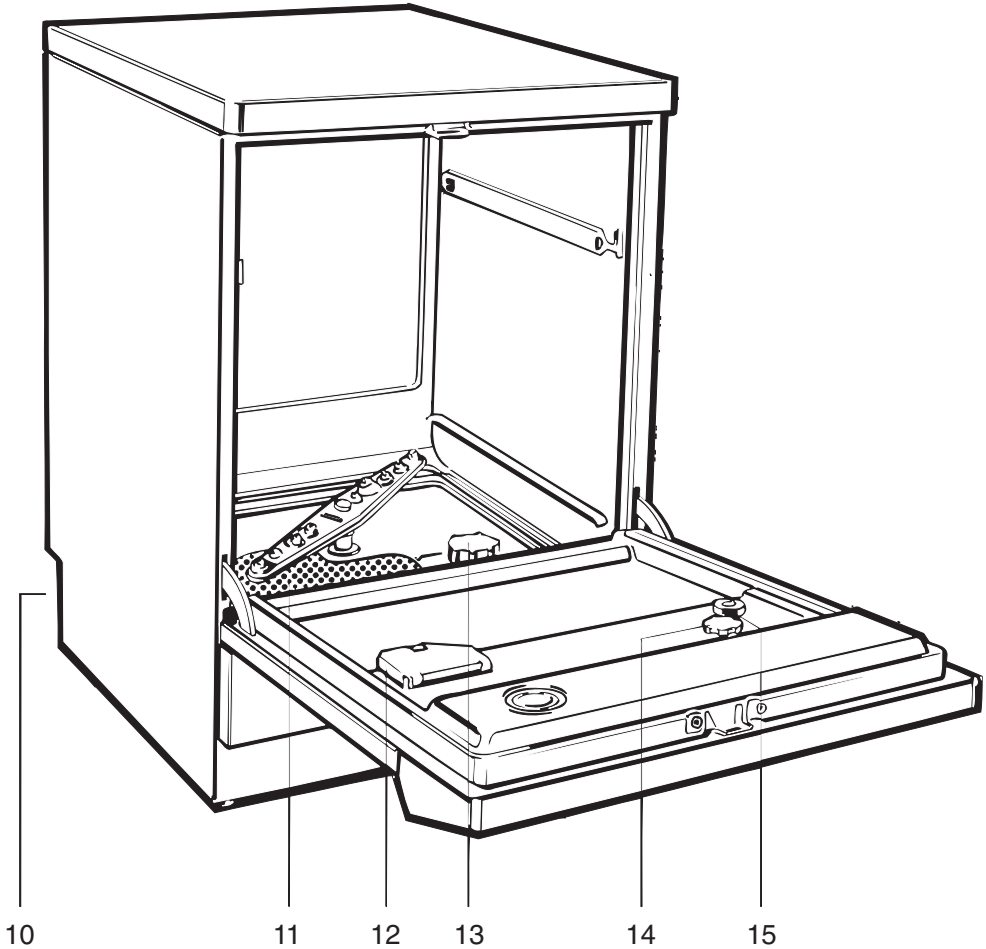

10 Connection for DOS-Module (at rear)

11 Filter combination

12 Dispenser for powder detergent

13 Connection socket for salt container (Water softener)

14 Dispenser for liquid rinsing agent with dosage selector

15 Level indicator

This machine conforms to current safety requirements. Inappropriate use can however lead to personal injury and damage to property.
Read the operating instructions carefully before starting to use this machine. This way you will avoid the risk of accidents, and damage to the machine.
Keep these instructions in a safe place, and make them available to future users.

Correct usage

This machine is designed for commercial use and for specialised applications only, as described in these Operating Instructions. Using it for purposes other than those for which it was designed would be unauthorised and could cause harm.
The manufacturer cannot be held responsible for damage caused by improper use.

Please pay attention to the following notes, to maintain safe procedures.

The machine should be commissioned and then maintained only by the Miele Service Department, an authorised Miele Service Dealer or other approved competent person.

Do not install the machine in an area where a danger of explosion may be present.

The electrical safety of this machine can only be guaranteed if connected to a correctly installed earthing system on site. It is most important that this basic safety requirement is met and complies with local and national regulations. It should be checked by an expert if necessary.
The manufacturer cannot be held responsible for damage caused by missing or defective earthing, such as electric shock.

A damaged machine is dangerous. Switch off at the mains immediately and call an authorised Miele service dealer, or suitably competent engineer.

Repair work may only be carried out by an authorised, suitably competent person. Repairs by unqualified persons could be dangerous.

Personnel operating the machine should be trained regularly. Children and untrained personnel should not be allowed access to the machine or its controls.

Accessories

Use special inserts in accordance with the instructions provided.

Take care when handling liquids such as detergents, wetting agents, or neutralising agents. These may contain irritant or corrosive ingredients, acids or alkalis. On no account use any organic solvent, as there may be the danger of an explosion occurring.
Follow the instructions and relevant safety procedures carefully. Wear protective gloves and goggles.

Avoid inhalation of powder cleaners. They can cause burning in the mouth and throat if swallowed, or inhibit breathing.

The water in the machine must not be used as drinking water.

Do not sit or lean on the open door, or rest objects on it. This could cause the machine to tip and be damaged.

Be careful when sorting items with sharp pointed ends and positioning them in the machine that you do not hurt yourself or create danger for other operators.

When using this machine in the temperature ranges from 70 to 95°C be especially careful not to scald or burn yourself. Baskets and inserts must first cool down. Any water which may remain in containers will be very hot and must be emptied into the wash cabinet.

Do not touch the heating elements during or directly after the end of a programme, you could burn yourself.

Never use an ordinary or a high pressure hose on or in the vicinity of the machine.

Before any maintenance or repair work is undertaken, the machine must be disconnected from the mains supply, by switching off at the mains isolator, or withdrawing the mains fuse.

The following points should be observed to avoid damage to the machine and the loads being cleaned.

The standard of disinfection in the Disinfection programmes must be confirmed by the user as a routine matter. The process should be regularly checked using chemical indicators, and bacteriologically at intervals using bio-indicators, with full documentation. Proceed according to local health authority regulations.

Disinfection programmes must not be interrupted, as this can have a limiting effect on the disinfection result. However, should an interruption be necessary. the complete programme must be repeated.

Only use cleaning agents formulated for special processes and approved by Miele for use with this machine. Use of unsuitable cleaning agents could adversely affect the load or the machine.

For pre-treatment and / or cleaning only use low-foaming detergents and disinfecting agents which have been approved by Miele. Foam can have an adverse effect on the disinfection and cleaning process.

Where a chemical additive is recommended on technical application grounds (for example with a cleaning agent), this does not imply that the manufacturer of the machine takes responsibility for the effect of the chemical on the material of the items being cleaned. Please be aware that changes in formulation, storage conditions etc, which may not be publicised by the chemical producer, can have a negative effect on the cleaning result.

When using cleaning agents and specialised products it is essential that the manufacturer's instructions are followed. Only use the product for the application described by the manufacturer, to avoid any material damage or the occurrence of strong chemical reactions such as oxyhydrogen.

The machine is designed only for operation with water and additive cleaning agents. Organic solvents must not be used in the machine, as there is the danger under certain circumstances of explosion. Although this is not the case with all organic solvents, other problems could arise with their use, for example damage to rubber and synthetic materials.

In critical applications where very stringent requirements have to be met, it is strongly recommended that all the relevant factors for the process, such as cleaning agent, quality of water are discussed with the Miele Application Technology specialists.

If the cleaning result is subject to these particularly stringent requirements (e.g. chemical analysis, specialised processes), a regular quality control test should be carried out by the user to ensure that required standards of cleanliness are being achieved.

Please follow the advice on installation in these instructions and the separate Installation Instructions.

Empty any containers or utensils before arranging them in the machine.

Do not allow any remains of acids or solvents, or chloride solutions to get into the wash cabinet. Similarly avoid any materials with a corrosive effect.
The presence in compounds of any solvents should be minimal, (especially those in hazard class A1).

Ensure that solutions or steam containing acid salts do not come into contact with the steel outer casing of the machine, to avoid any corrosion damage.

Use special inserts in accordance with the instructions provided.

Accessories

The only accessories to be used with the special commercial machine must be those supplied or approved by MIELE for the specific application. Consult your dealer or the Miele Professional department for advice.

Disposal of an old machine

When disposing of an old machine first make it unusable. Disconnect, cut off the cable and any plug from the cable. For environmental and safety reasons ensure the machine is completely drained of any residue water and cleaning agent. (Observe safety regulations and wear safety goggles and gloves). Make the door lock inoperative, so that children cannot accidentally shut themselves in. The simplest way to do this is to remove the locking pin (2 philips screws above the door). Make appropriate arrangements for the safe disposal of the machine. For tank system machines ensure that any water is emptied out of the tank.

In countries where there are areas which may be subject to infestation by cockroaches or other vermin, pay particular attention to keeping the machine and its surroundings in a clean condition at all times. Any damage which may be caused by cockroaches or other vermin will not be covered by the machine guarantee.

The manufacturer cannot be held responsible for any damage caused through non-observance of these Warning and Safety instructions.

The G 7783 is a front-loading automatic machine for the efficient washing - neutralising - rinsing - final rinsing of laboratory glassware. It can be operated on normal water supply. There are “AD” (aqua destillata) programmes with final rinses using purified water (distilled, R.O., or de-ionised).

On completion of the automatic programme sequence, laboratory glassware is cleaned to the standard required for analysis.

The electronic control unit offers a choice of temperatures for the cleaning and final rinsing phases. A combination often preferred is cleaning - T_1 85°C and final rinse T_2 70°C.

With the SPECIAL “B” programme the machine can thermally disinfect at 90°C with relevant holding times.

“Instrument disinfection in automatic machines” is to be found under subsection 3.2.4. of paragraph 10c of BSeuchG, according to the German Federal Health Authority, Berlin (BGA). The disinfection parameters of between 90°C and 93°C held for 10 minutes apply to the effective areas A + B. Reduction factor 7 (by reduction factor $\sim 10^7$).

The effective areas are defined as follows:

A = Suitable for destruction of vegetative bacteria, including myco-bacteria and fungus and fungal spores.

B = Suitable for inactivation of viruses (including HBV and HIV).

The SPECIAL “B” programme operates at 90°C with 10 minutes holding time.

Setting the water softener

To avoid the build-up of calcium deposits on glassware and in the machine the water needs to be softened, where the supply hardness exceeds 107 ppm, (6°d).

To ensure a steady supply of soft water the water softener unit must always be:

1. correctly set, and
2. regenerated with salt as soon as the ⊆ indicator light comes on.

The water softener must be set to correspond with the water hardness the first time the machine is used.

Your local water authority will advise you on the water hardness in your area.

Setting the Water Softener

The hardness range is divided into 18 “time” units and a zero position. The machine is set at the factory at time unit ’8’, corresponding to 339 ppm, (19 °d).

If your water supply is harder or softer than this, then:

- Use the touch pads on the control panel to change the time setting (see Table).

Time-setting	°d	mmol/l	° f	°e	ppm $CaCO_3$
18	6	1,07	10,7	7,5	107
17	7	1,25	12,5	8,8	125
16	8	1,43	14,3	10,0	143
15	9	1,60	16,0	11,3	160
14	10	1,79	17,9	12,5	179
13	11	1,96	19,6	13,8	196
12	12	2,14	21,4	15,0	214
11	13	2,32	23,2	16,3	232
10	15	2,67	26,8	18,8	268
9	17	3,04	30,4	21,3	304
8	19	3,38	33,9	23,8	339
7	22	3,93	39,3	27,5	393
6	24	4,28	42,8	30,0	428
5	28	5,00	50,0	35,0	500
4	32	5,71	57,1	40,0	571
3	38	6,78	67,8	47,6	678
2	48	8,57	85,7	60,1	857
1	71	12,67	126,7	88,9	1267
0					

- Press **T_1** and touch pads simultaneously, keep them held down and switch on the machine with the main switch"I-0".
  The current programming status “P...” will appear in the display field.
- Press touch pad ⊆. The “P” will disappear and setting “0" will always appear in the display field. This setting ”0" can now be changed if necessary. To do this:
- Press touch pad as many times as is necessary for the desired value to appear in the display field.
- Press touch pad ◇. “SP” appears.
- Press ◇ once again. The setting will now be stored. The display field clears.
- The machine is now ready for operation.

If the water hardness in your area is permanently below 107 ppm (6 d):

- Select setting “0".
  The control light will not come on and the water softener does not need to be reactivated.

See section on Reactivating the water softener.

To open the door

- Press the release catch as far as it will go and, at the same time, grasp the door grip and open the door.

The door should only be opened during operation for emergencies: e.g. if articles are knocking together (see “Interrupting a programme”).

To close the door

- Lift the door upwards and push until it clicks into position. Do not press the release catch.

This laboratory glasswasher normally requires a top and a bottom basket.

Depending on the type and shape of the glassware, inserts can be supplied. The diversity of the inserts is so great that it is not possible to illustrate them all or give detailed instructions on their use here. As an example there are inserts for direct injection spraying of volumetric flasks, butyrometers, pipettes etc.
General glassware used in laboratories, e.g. beakers, conical flasks, test tubes, etc., can be arranged in full-size, half or quarter inserts in top or bottom baskets. Your Miele laboratory dealer will advise on specific requirements.

The following instructions relate only to basic preparation and loading of glassware.

Arranging the load

Removing excess soils

- Empty all glassware before loading into the machine, (observe any applicable hygiene regulations).

Ensure that no acid or solvent residues, especially hydrochloric acid or chlorides get into the wash cabinet.

- Remove all agar residues from petri dishes.
- Remove blood clots and residues.
- Remove all stoppers, corks, labels, sealing wax residues, etc.

Please note:

- Load the glassware so that water will come into contact with all surfaces.
- Do not place items to be cleaned inside other pieces where they may be concealed.
- Hollow vessels such as beakers, measuring cylinders, flasks, etc. should be inverted and placed in the correct inserts. A cover net can be used to reduce the risk of movement during the wash process.
- Petri dishes and similar should be placed in the correct insert with the soiled side facing the centre.
- Pipettes should be placed with the mouthpiece facing upwards.
- Deep based items should be placed at enough of an angle for water to run off them freely.
- Tall, narrow, hollow pieces should be placed in the centre of the basket to ensure good coverage of water.
- Do not cover the funnel in the middle of the top basket. Mobile injector units or baskets with an adapter must engage correctly, (see next page).
- The spray arms must not be blocked by items which are too tall for the basket or which hang down in their path. If necessary, manually rotate the arms to test this.

Important:

Make sure that the spring adapter for water connection engages correctly when a basket, injector or mobile unit is inserted into the machine. It must be 4-5 mm higher than the water connection inlet in the roof of the cabinet.
If it is not, adjust the adapter accordingly.

- Loosen the lock ring.
- Push up the adapter (4-5 mm higher than the water connection inlet) and tighten the lock ring.

Select baskets and inserts which are appropriate for the application.

Loading examples:

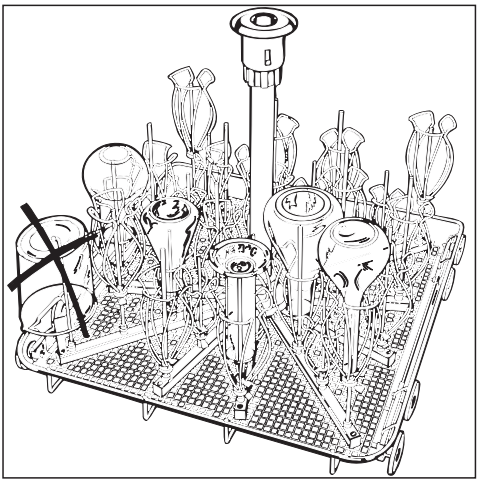

E 350
“Intermiel” injector mobile unit

For narrow necked glassware, complete with 15 nozzles 4x1 mm/160 mm high, 18 nozzles 6x1 mm/220 mm high with 33 “Mielava” clips.

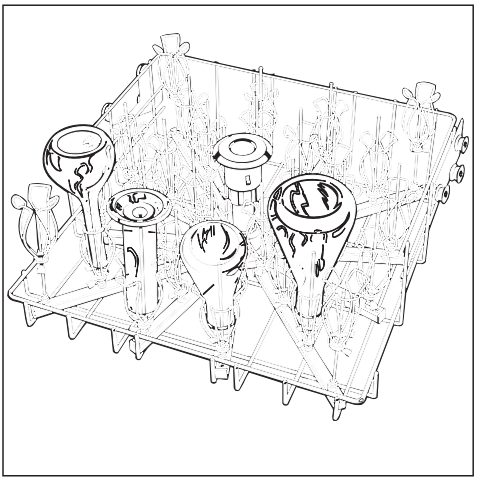

O 187
Injector mobile unit

(top basket) for direct injection of narrow necked glassware, 34 nozzles 4x1 mm/160 mm high with “Mielava” clips.

Important: With insert O 187 either liquid detergent must be used, (special accessory DOS module C 60), or powder must be placed only on the inside of the door.

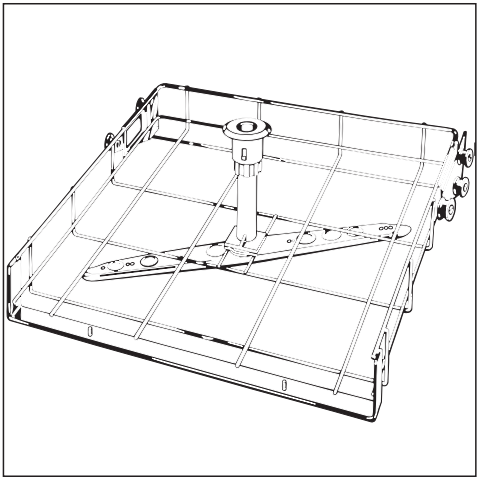

O 188 top basket frame

can take various inserts.

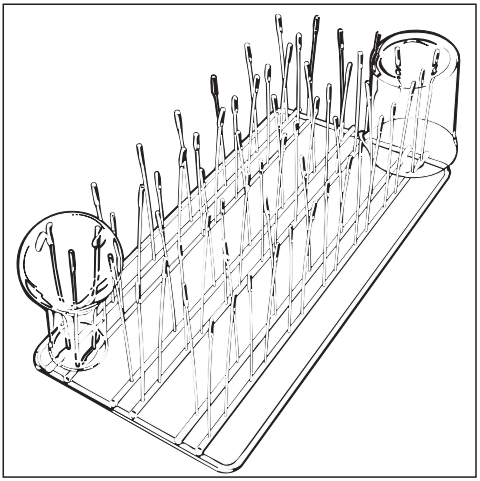

E 109

Half insert, stainless steel, for 21 glass beakers up to 250 ml, round and conical flasks etc.

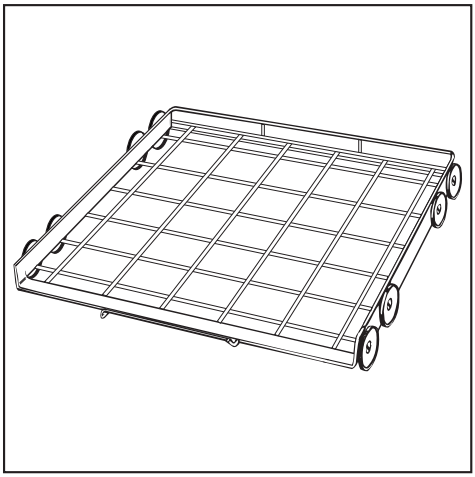

U 174 bottom basket frame

can take various inserts.

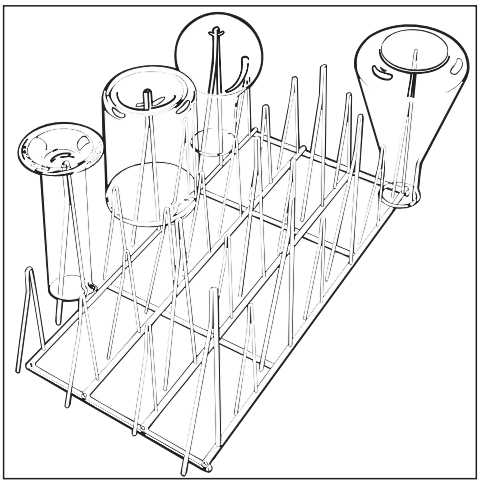

E 106

Half insert, st. steel, with 28 spring hooks at two heights for glassware, e.g narrow necked bottles, measuring cylinders, medicine bottles etc.

Adjusting the top basket

Adjustable top baskets can be used in this machine. They can be adjusted up or down by 2 cm from the middle position set on delivery.

In the middle position the top basket will accommodate:

- Vessels and glassware up to 19 cm in height,

and the bottom basket will accommodate:

- Vessels and glasses up to 25 cm in height.

For further details regarding vessel height combinations, see table below.

Top basket position	Top basket height (cm)	Bottom basket height (cm)
Top	17	27
Middle	19	25
Bottom	21	23

To adjust the top basket:

- Pull out the top basket until a resistance is felt, lift from the runners and remove.
- Unscrew the roller supports on both sides of the basket with a 7 mm spanner, reposition as required and re-tighten.

A liquid storage container incorporated in the door has a capacity of approximately 200 ml. The required amount of appropriate liquid rinsing agent (e.g. Mielclear where available) is dispensed automatically from this container.

Adding rinsing agent

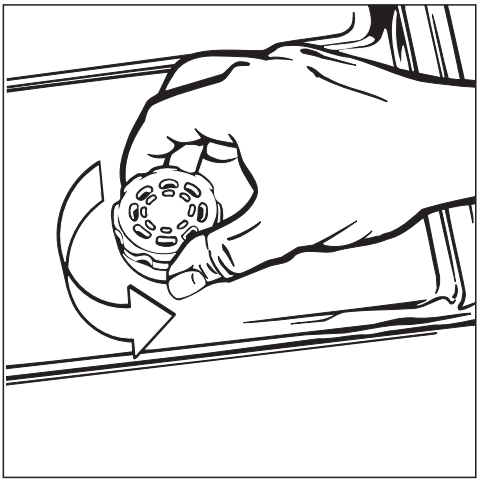

- Undo the screw cap.

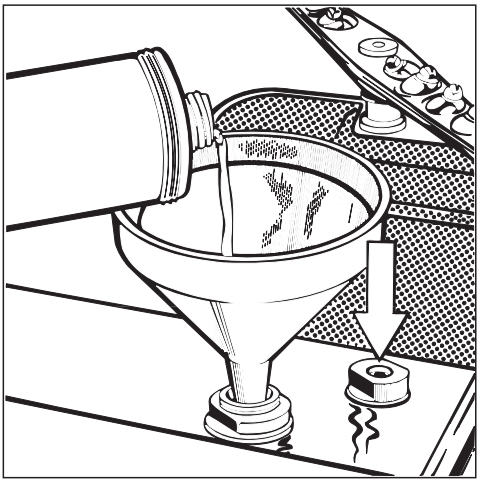

- Pour rinsing agent into the storage container until the level indicator is dark (see arrow in illustration). Use funnel if necessary.
- Firmly tighten the screw cap. Clean up any spillage.

Refilling with rinsing agent

The level indicator shows how much rinsing agent is left in the container. When there is no dark colouring visible in the level indicator, the container needs to be refilled.

Setting the dosage

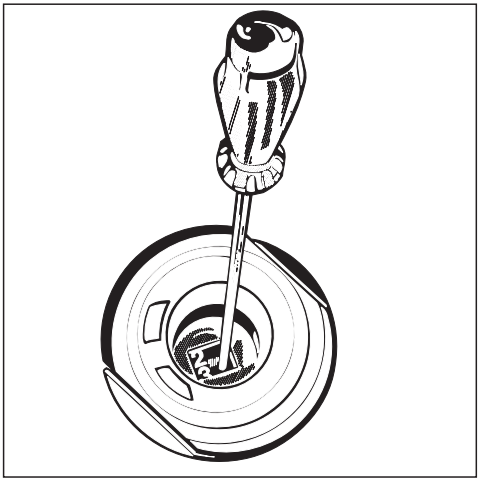

The dosage adjuster in the opening has settings from 1-6 (1-6 ml). It is set to “3" (3 ml) at the factory.

- Use a higher setting if spots are left after drying.
- If clouding or smearing appears, use a lower setting.

Adding neutralising agent

To reduce the pH to neutral after alkaline cleaning, special neutralising acids can be used in programme stage 4.

Important: “Special functions” must first be used to set the programme to dispense neutralising agent in stage 4, instead of rinsing agent.

- Place the container with neutralising agent on the floor next to the machine.

When the indicator light on the control panel lights up:

- Fill the container with neutralising agent, or change containers, and then:

- Place the siphon tube firmly in the opening of the free-standing container (pay attention to colour coding).

Re-fill the container in good time, it should never be allowed to empty completely.

Priming / venting the liquid dispensing system

Before using the machine for the first time, or if in later use the container had been allowed to empty, the dispensing system for liquid detergent must be vented, (this does not apply to the rinsing agent system).

Proceed as follows:

- Press the I-0 (ON-Off) button.
- Set the dispensing volume switch on the DOS-Module to “10", (only when activating Switch ”B").

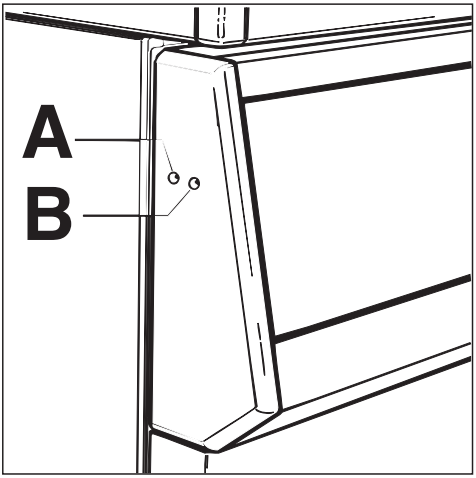

Switch “A”: Dispensing system for neutralising agent.
Switch “B”: Dispensing system for detergent (if using liquid detergent) (Special version with DOS-Module C 60).

- Use a pointed object to press in switch “A” and/or “B” at the left hand side end of the control panel for three and a half minutes.

Each time the system is vented any liquid which runs into the wash cabinet must be washed out as follows:

- Select programme “**A**” (Cold).

If/when the venting system for detergent (DOS-Module C 60) was vented:

- Set the dispensing volumefor regular cleaning use, (see separate DOS Module instructions).

After this the dispensing system is filled with the appropriate medium and is ready for use.

Checking the dispensing system

To maintain the performance of the dispensing system, it should be serviced at regular intervals.

This work should only be carried out by suitably qualified people or by a MIELE Service Engineer.

Every 12-18 months

– Replace the dispensing hoses in the dispensing systems and/or the DOS modules.

Adding powder detergent

Only use specific detergents for special cleaning applications.
Do not use domestic dishwasher detergents.

If not using liquid, fill dispenser in the door with powder detergent before each programme (See “Programme ’B’ and...” for exceptions).

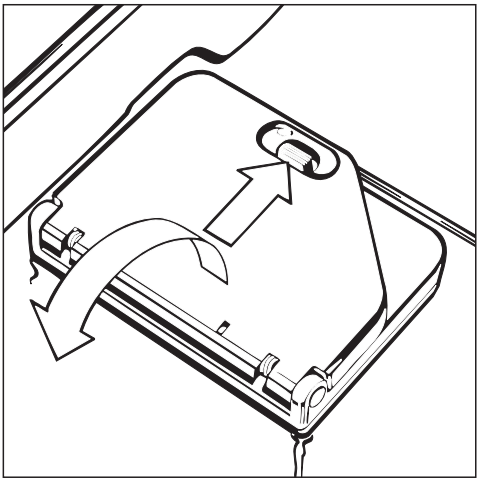

- Press the opening catch on the container flap forwards (see arrow). The flap will spring open. (The flap will be open at the end of a programme).

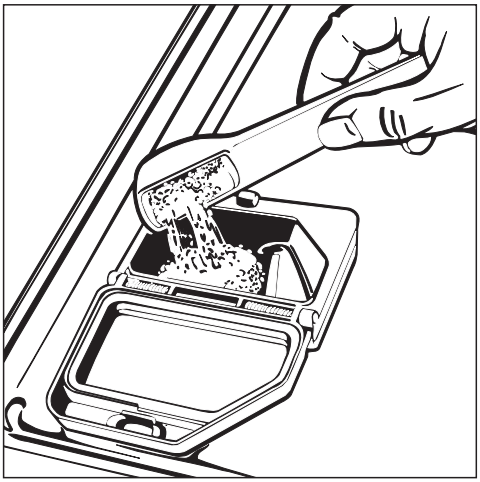

- Fill the dispenser with the appropriate amount.

Dosage: approximately 3 g/l, corresponding to approximately 30 g per load.
Follow manufacturer’s instructions.

- Close the dispenser lid.

Programme: “B”, and when using O 187 and pipette holder:

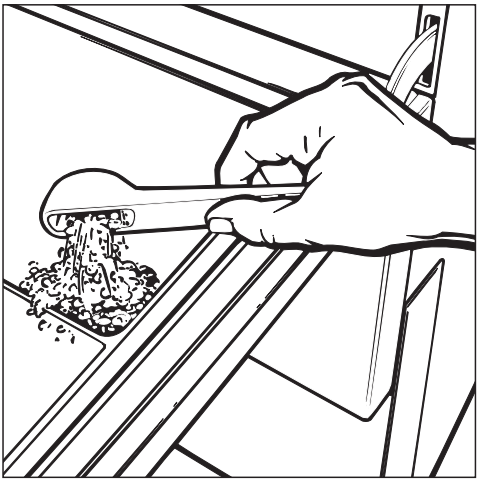

- Add powder detergent directly to the inside of the door.

An additional dose can be added to the inside of the door when required in applications **E** and **F** (see Programme chart).

Note
If required at extra cost the machine can be equipped with a dispenser pump for liquid detergent, **“DOS-Module C 60"** (connected externally).

Separate instructions for installation and use are supplied with the DOS module.

When selecting a detergent please bear in mind the ecological effects, in particular the following considerations:

- How much alkalinity is needed to do the required cleaning?
- Is bleach required for disinfection or stain removal?
- Are tensides at all necessary for dispersal or emulsification?
- For thermal disinfection programmes a suitable mildly alkaline and chlorine-free cleaner should be used.

Under certain circumstances, i.e. special soiling, different combinations of detergents and other additives may be necessary. Consult your Miele laboratory dealer.

Take care when handling liquids such as detergents, disinfecting and neutralising agents. These may contain acids, alkalis or disinfectants. Follow the relevant safety procedures and the instructions on the packaging carefully.
Wear protective gloves and goggles if necessary.

Programme selection

Choose your programme according to the type of glassware and the degree of soiling.

The different programmes and their applications are described overleaf in the **Programme chart**.

Programme chart

Programme	When to use	Detergent (when not using liquid agent)
		Follow manufacturer's instructions
A = COLD	Pre-wash programme to pre-rinse glassware of problem chemicals or residues etc	
B = SPECIAL	Thermal Disinfection to BGA-standard. Loosening / cleaning of particularly stubborn soil.	30 grammes on to the right hand side door interior
C = MINI	For lightly soiled glassware without AD rinsing.	30 grammes in the powder dispenser
D = STANDARD	A programme with two AD rinses where the glassware is intended for analytical use.	30 grammes in the powder dispenser
E = UNIVERSAL	Programme with two AD rinses for glassware intended for analytical use, which is more heavily soiled with for example oil and grease residues. (Connect the cold water inlet to hot water if residues to be dispersed are oil-based).	30 grammes in the powder dispenser (and also 30 grammes on the right hand side door interior if needed)
F = INTENSIVE-PLUS	For particularly encrusted residues, agar, etc.	30 grammes in the powder dispenser (and also 30 grammes on to the right hand side door interior if needed)

To the person responsible for this machine:

- Make this pull-out with the Warning and Safety instructions available to any operators of the machine. Place it near the machine, where it can be seen and not removed.
- Ensure that operators know and understand these Warning and Safety instructions, and observe them in use.

This machine conforms to current safety requirements. Inappropriate use can however lead to personal injury and damage to property.
Read the operating instructions carefully before starting to use this machine. This way you will avoid the risk of accidents, and damage to the machine.
Keep these instructions in a safe place, and make them available to future users.

Correct usage

This machine is designed for commercial use and for specialised applications only, as described in these Operating Instructions. Using it for purposes other than those for which it was designed would be unauthorised and could cause harm.
The manufacturer cannot be held responsible for damage caused by improper use.

Please pay attention to the following notes, to maintain safe procedures.

The machine should be commissioned and then maintained only by the Miele Service Department, an authorised Miele Service Dealer or other approved competent person.

Do not install the machine in an area where a danger of explosion may be present.

The electrical safety of this machine can only be guaranteed if connected to a correctly installed earthing system on site. It is most important that this basic safety requirement is met and complies with local and national regulations. It should be checked by an expert if necessary.
The manufacturer cannot be held responsible for damage caused by missing or defective earthing, such as electric shock.

A damaged machine is dangerous. Switch off at the mains immediately and call an authorised Miele service dealer, or suitably competent engineer.

Repair work may only be carried out by an authorised, suitably competent person. Repairs by unqualified persons could be dangerous.

Personnel operating the machine should be trained regularly. Children and untrained personnel should not be allowed access to the machine or its controls.

Take care when handling liquids such as detergents, wetting agents, or neutralising agents. These may contain irritant or corrosive ingredients, acids or alkalis. On no account use any organic solvent, as there may be the danger of an explosion occurring.
Follow the instructions and relevant safety procedures carefully. Wear protective gloves and goggles.

Avoid inhalation of powder cleaners. They can cause burning in the mouth and throat if swallowed, or inhibit breathing.

The water in the machine must not be used as drinking water.

Do not sit or lean on the open door, or rest objects on it. This could cause the machine to tip and be damaged.

Be careful when sorting items with sharp pointed ends and positioning them in the machine that you do not hurt yourself or create danger for other operators.

When using this machine in the temperature ranges from 70 to 95°C be especially careful not to scald or burn yourself. Baskets and inserts must first cool down. Any water which may remain in containers will be very hot and must be emptied into the wash cabinet.

Do not touch the heating elements during or directly after the end of a programme, you could burn yourself.

Never use an ordinary or a high pressure hose on or in the vicinity of the machine.

Before any maintenance or repair work is undertaken, the machine must be disconnected from the mains supply, by switching off at the mains isolator, or withdrawing the mains fuse.

The following points should be observed to avoid damage to the machine and the loads being cleaned.

The standard of disinfection in the Disinfection programmes must be confirmed by the user as a routine matter. The process should be regularly checked using chemical indicators, and bacteriologically at intervals using bio-indicators, with full documentation. Proceed according to local health authority regulations.

Disinfection programmes must not be interrupted, as this can have a limiting effect on the disinfection result. However, should an interruption be necessary. the complete programme must be repeated.

Only use cleaning agents formulated for special processes and approved by Miele for use with this machine. Use of unsuitable cleaning agents could adversely affect the load or the machine.

For pre-treatment and / or cleaning only use low-foaming detergents and disinfecting agents which have been approved by Miele. Foam can have an adverse effect on the disinfection and cleaning process.

Where a chemical additive is recommended on technical application grounds (for example with a cleaning agent), this does not imply that the manufacturer of the machine takes responsibility for the effect of the chemical on the material of the items being cleaned. Please be aware that changes in formulation, storage conditions etc, which may not be publicised by the chemical producer, can have a negative effect on the cleaning result.

When using cleaning agents and specialised products it is essential that the manufacturer's instructions are followed. Only use the product for the application described by the manufacturer, to avoid any material damage or the occurrence of strong chemical reactions such as oxyhydrogen.

The machine is designed only for operation with water and additive cleaning agents. Organic solvents must not be used in the machine, as there is the danger under certain circumstances of explosion. Although this is not the case with all organic solvents, other problems could arise with their use, for example damage to rubber and synthetic materials.

In critical applications where very stringent requirements have to be met, it is strongly recommended that all the relevant factors for the process, such as cleaning agent, quality of water are discussed with the Miele Application Technology specialists.

If the cleaning result is subject to these particularly stringent requirements (e.g. chemical analysis, specialised processes), a regular quality control test should be carried out by the user to ensure that required standards of cleanliness are being achieved.

Please follow the advice on installation in these instructions and the separate Installation Instructions.

Empty any containers or utensils before arranging them in the machine.

Do not allow any remains of acids or solvents, or chloride solutions to get into the wash cabinet. Similarly avoid any materials with a corrosive effect.
The presence in compounds of any solvents should be minimal, (especially those in hazard class A1).

Ensure that solutions or steam containing acid salts do not come into contact with the steel outer casing of the machine, to avoid any corrosion damage.

Use special inserts in accordance with the instructions provided.

Accessories

The only accessories to be used with the special commercial machine must be those supplied or approved by MIELE for the specific application. Consult your dealer or the Miele Professional department for advice.

Disposal of an old machine

When disposing of an old machine first make it unusable. Disconnect, cut off the cable and any plug from the cable. For environmental and safety reasons ensure the machine is completely drained of any residue water and cleaning agent. (Observe safety regulations and wear safety goggles and gloves). Make the door lock inoperative, so that children cannot accidentally shut themselves in. The simplest way to do this is to remove the locking pin (2 philips screws above the door). Make appropriate arrangements for the safe disposal of the machine. For tank system machines ensure that any water is emptied out of the tank.

In countries where there are areas which may be subject to infestation by cockroaches or other vermin, pay particular attention to keeping the machine and its surroundings in a clean condition at all times. Any damage which may be caused by cockroaches or other vermin will not be covered by the machine guarantee.

The manufacturer cannot be held responsible for any damage caused through non-observance of these Warning and Safety instructions.

Programme cycle								Miscellaneous
1. Pre-liminary pre-wash I	2. Pre-wash II	3. Main wash & possible thermal disinf	4. Interim rinse I & possibly neutral-isation ***)**	5. Interim rinse II	6. Interim rinse III	7. Final-rinse	8. Drying (extra prog. ***)**	***)** see "Programming special functions"
X								
		X 93°C max. ****)**	X	X		X 70°C AD	(X)	****)** increase in temp. holding time see "Special functions"
	X	X 60°C	X	X		X 60°C	(X)	
		X 85°C	X	X	X AD	X 70°C AD	(X)	
X		X 85°C	X	X	X AD	X 70°C AD	(X)	
X	X	X 85°C	X	X AD	X AD	X 70°C AD	(X)	

AD (Aqua destillata) = purified water, (distilled, R.O.,or de-ionised).

X = sections included in standard programmes

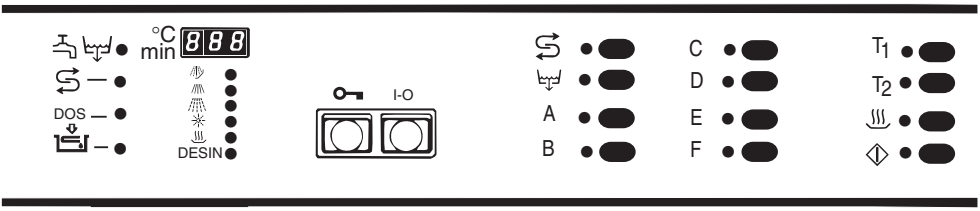

1. Switching on

- Press I-0 button.

2. Selecting a programme

After switching on the machine the indicator lights next to the selectors will light up to show the selection available.

- Press the programme selector for the required programme. The wash temperature of the programme selected will show up in the display field.
- Select additional programme **T_1** / **T_2** “TEMPERATURE” and/or “DRYING” (see “Selecting an additional programme”).
- Press the “Start” touch pad ◇. The display panel will now show the running time in minutes for the selected programme, (counting up). During the heat-up stage in “Washing/disinfecting” and “Final rinse” the required temperature will be displayed in the panel.

All other programmes are automatically blocked and only the lights for the programme selected stay on.

Programme Changes

Provided the “Start” touch pad has not yet been pressed, a wrongly selected programme may be changed as follows:

- Press the appropriate touch pad to select the required programme.
- Press the “Start” touch pad ◇.
- Otherwise “Interrupt programme” - (see next page).

3. Selecting an additional programme

The following additional programmes are available:

- **T_1** TEMPERATURE FOR WASHING
  T2 TEMPERATURE FOR FINAL RINSING
  Immediately after the selection of a washing programme the temperature for washing and for final rinsing can be altered through the additional programme “Temperature”. Press on the appropriate touch pad T_1 or T_2 for as many times as necessary to change the temperature step by step (40°C / 50°C / 60°C / 70°C / 85°C / 93°C). The last temperature chosen will be stored for the following wash/rinse cycles, and will be shown in the display field.

DRYING
This may be selected immediately after choosing a wash programme (exception: **A** “Cold”). The heater element switches on intermittently for the drying process for 10 minute spells. The total running time of the programme will be lengthened accordingly.

REACTIVATION programme
(see “Reactivating water softener”).

DRAIN,
if for example the programme has been interrupted
– Press the I-0 button.
– Press the touch pad.
– Press the “Start” touch pad .

Programme sequence indicator

When a washing programme has been selected, the indicator lights in the display will show the programme sequence.

	Pre-wash
	Main wash / possible disinfecting
	Interim rinse
	Final rinse
	Drying (additional programme)

DESIN Disinfection
(Only with the “B” SPECIAL programme), maintaining the temperature parameter between 90°C and 93°C for 10 or 25 minutes respectively, or at 85°C for 10 or 25 minutes respectively. When part of a programme is complete, the corresponding indicator light goes out.

The programme is completed when no indicator lights are left on (expect for “DESIN” for the “B” SPECIAL programme) and when the “Start” light goes out. The display panel will show the total running time of the programme.

Switching off

- Press the I-0 switch and let it spring out.

The machine can now be opened and unloaded.

Interrupting a programme

Once a programme is running it should only be interrupted in extreme cases, e.g.: when articles in the machine rattle or bump against each other and have to be rearranged.

The machine must then be switched off, the water drained and the programme restarted:

- Switch the machine on and off again with the I-0 switch.
- Select the “DRAIN” programme (Additional programmes)
- Open the door and replace the items securely and correctly. Take any hygiene measures necessary against infection and wear protective gloves where necessary.
- Replenish the powder detergent dispenser in the door if necessary.
- Close the door.
- Reselect the programme.

The following special functions can be programmed where appropriate:

1. Setting water inlet to “level plus time control” instead of timed inlet (60 secs).

If the inlet water pressure is lower than 2.5 bar, too little water will flow into the wash cabinet. By selecting “level plus time control” flow, more water will flow into the wash cabinet, if there is an inlet water pressure between 1 and 2.5 bar.

The setting is adjusted separately for cold, hot and AD (de-ionised) water.

Proceed as follows:

- Switch off the machine.

1a. Cold water connection

- Press **T1** and ⌒ at the same time, hold them in and also switch on the machine with the main switch “I-0". The current programme status ”P..." appears in the display.
- Press **F**, “10" or ”11" will appear in the display..
  “10" = **Cold**-water connection time control (60 secs).
  ”11" = **Cold**-water connection level plus time control.
- Press ⌒, to change from “10" to ”11" or vice versa.
- Press ◇. “SP” appears in the display.
- Press ◇ once again. The change has been recorded and the display field clears.

1b. Hot water connection

- Switch off the machine.
- Press **T1** and ⌒ at the same time, hold them in and also switch on the machine with the main switch “I-0". The current programme status ”P..." appears in the display.
- Press **E**, “20" oder ”21" will appear in the display.
  “20" = **Hot**-water connection time control (60 secs).
  ”21" = **Hot**-water connection level plus time control.
- Press ⌒ to change from “20" to ”21" or vice versa.
- Press ◇. “SP” appears in the display.
- Press ◇ again. The change has been recorded and the display field clears.

1c. AD-Water connection

- Switch off the machine.
- Press **T1** and ⌒ at the same time, hold them in and also switch on the machine with “I-0". The current programme status ”P..." appears in the display.
- Press **D**. “30" or ”31".will appear in the display.
  “30" = **AD**-water inflow time control 60 secs).
  ”31" = **AD**-water inflow level plus time control.
- Press ⌒, to change from “30" to ”31" or vice versa.

- Press ◇. “SP” appears in the display.
- Press ◇ again. The change has been recorded and the display field clears.

2. Increasing the temperature holding time from 10’ to 25’ in the “Wash” part of the programme, (only in the “B” SPECIAL programme).

- Switch off the machine.
- Press **T1** and ♨ at the same time, hold them in and also switch on the machine with I-0.
  The current programme status “P...” appears in the display.
- Press **C**, “40" or “41” will appear in the display.
  “40” = Temp. holding time 10 mins
  “41” = Temp. holding time 25 mins
- Press ♨.to change from “40” to “41” or vice versa.
- Press ◇. “SP” appears in the display.
- Press ◇ again. The change has been recorded and the display field clears.

Note:
The **T1** temperature must not exceed 85 °C. (See “Selecting additional programmes”).

3. Adding neutralising agent in the “Interim rinse I” part of the programme.

The machine is set at the factory for rinsing agent to be dispensed in the “Final rinse” part of the programme. If neutralising agent is to be dispensed instead make the following adjustment:

- Switch off the machine.
- Press **T1** and ♨ at the same time, hold them in and also switch on the machine with “I-0".
  The current programme status ”P..." appears in the display.
- Press **B**, “50" or ”51" will appear in the display.
  “50" = Rinsing agent dosage
  ”51" = Neutralising agent dosage
- Press ♨ to change from “50" to ”51" or vice versa.
- Press ◇. “SP” appears in the display.
- Press ◇ again. The change has been recorded and the display field clears.

Reactivating the water softener

When the ⇶ indicator light on the left hand side of the control panel comes on during a programme the built-in water softener is depleted and cannot supply any more softened water. It must therefore be reactivated with dishwasher salt as soon as the programme has finished.

If this cannot be done immediately, and further batches have been washed, then the reactivation process must be carried out twice in succession.

Only use special coarse grained dishwasher salt (granule size approx. 1-4 mm), for reactivation, as other salts may contain insoluble impurities or additives which can impair the functioning of the softener.

The salt container holds approx. 2 kg salt.

Important

If the only reactivation salt available is fine grain, please consult your Miele service representative.

Reactivation salt with granules larger than 4 mm cannot be used.

Never fill the salt reservoir with dishwasher cleaning agent
this can lead to
- damage to the water softener and
- blockage of the salt container filter insert, resulting in a build up of pressure in the salt reservoir.

The irritant alkali solution could be a hazard and personal injury could be caused when the salt container is removed.
Make sure that you have picked up the right packet of dishwasher salt before filling the salt container.

Filling the salt container

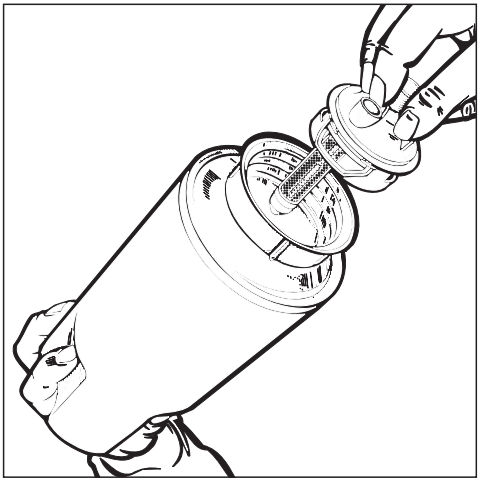

- Unscrew the filter insert from the salt container and remove.
- Fill the salt container **with granular dishwasher salt** and screw the filter insert back in place.

Position the salt container as follows:

- Remove the bottom basket from the machine.

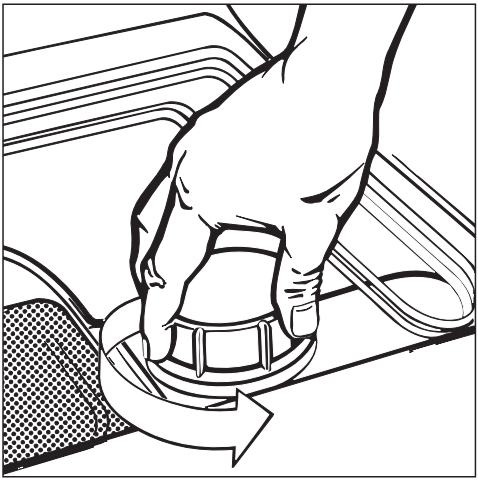

- Unscrew the plastic cap in the base of the wash cabinet.

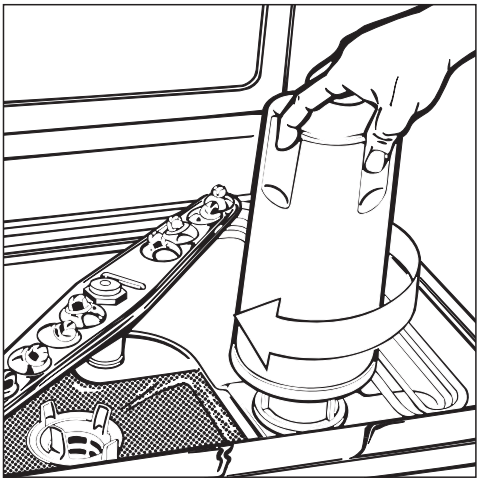

- Place the salt container on the reactivation socket and screw firmly into place.

Switch on the machine

- Open the stopcocks if previously closed.
- Close the door.
- Press I-0.
- Press the ⊆ touch pad.
- Press the "Start" ◇ touch pad.

The reactivation programme proceeds automatically and finishes when the indicator light ⊆ at the left hand side of the control panel and the "Start" indicator light h have gone out.

Then:

- Switch off the machine.
- Unscrew the salt container carefully, so that any water pressure that has built up can be released. Do not use force. If you cannot uncrew the salt container by hand, contact the Miele Service department.
- Screw the plastic lid back on the socket.
- Reposition bottom basket.
- Rinse the salt container and filter insert thoroughly.
- Turn off the stopcocks if the machine is not to be used again for some time.

Important

The water pressure (flow pressure at the take off point) must be at least 2.5 bar.
If it less than this see "Programming special functions".

If the flow pressure is below 2.5 bar, or if it fluctuates, the water softener cannot be reactivated in the normal way. After reactivation, salt remains may still be found in the salt container.

To use up the salt remains and to wash out the water softener, the "reactivate softener" programme must be switched on again.

Cleaning the filters in the water cabinet

The filter combination in the base of the cabinet should be inspected regularly and cleaned if necessary.

Caution
Watch out for glass splinters which could cause injury.

Cleaning the coarse filter

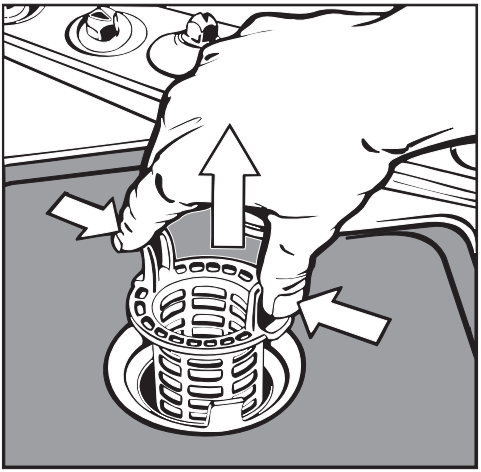

- Press the 2 lugs together, remove and clean the filter.
- Put the clean filter back in position and press until it clicks in place.

Cleaning the fine, micro-fine and flat filters

- Remove the coarse filter
- Remove the fine filter which (if fitted) sits between the coarse and micro-fine filters.

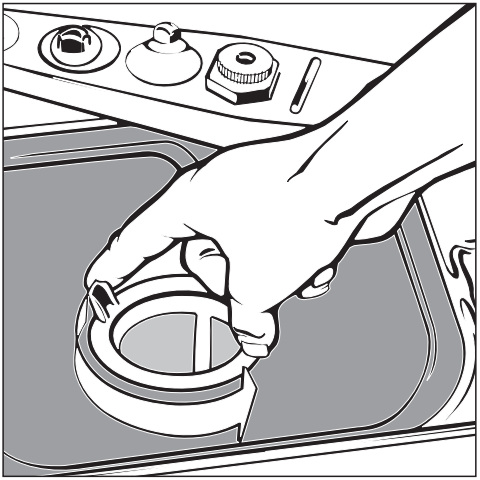

- To unscrew the micro-fine filter, take hold of the two lugs, turn twice in an anti-clockwise direction,

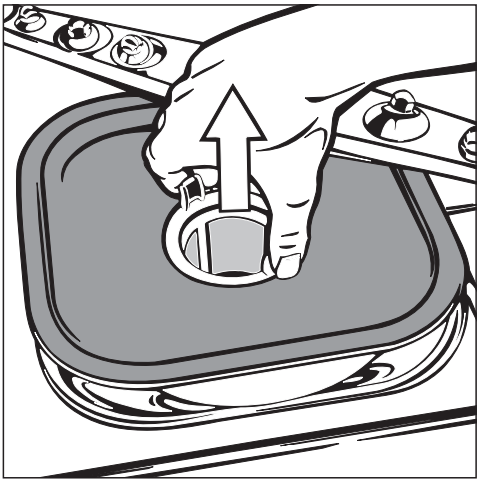

- and remove, together with the flat filter. Then clean the filters.
- The filter combination is then replaced in the reverse order to which it was removed.

The machine must not be used without all filters in place.

Cleaning the filters in the water inlet

For the protection of the inlet valve(s), filters are incorporated in the screw connection of the water inlet hose. The filters must be cleaned when dirty, otherwise insufficient water flows into the wash cabinet.

- Turn off stopcocks.
- Unscrew the water inlet hoses.

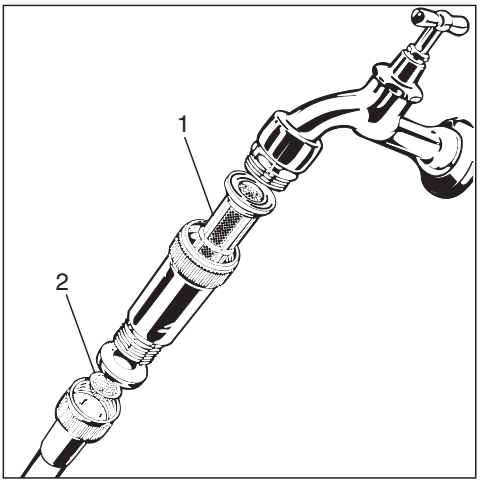

- Clean large area filter (1) and fine filter (2) or replace if necessary.
- After reconnection, turn on the stopcock to test for leaks.

There is a further filter in front of the water inlet valve which must only be cleaned or replaced by a suitably qualified and competent person.

Correcting minor faults

With the aid of the following explanatory notes, minor faults can usually be corrected without contacting the Miele Service Department.

Any work on the electrical components of the machine should only be carried out by a suitably qualified and competent person.

Faults / Possible Causes

The machine does not start

- Check that the door is properly closed.
- Check the plug connection or isolator.
- Check the fuses.

A few minutes after switching on, the indicator light flashes.

- The stopcocks are closed.
- The filters in the water inlet hose are dirty.
- Switch off the machine.
- Open the stopcocks or clean the filters (see “Cleaning and care”).
- Switch on the machine again and re-select the programme.

The wash cycle finishes too early and the indicator light flashes

- The drain hose is kinked.
- The door was opened and closed during the programme.
- There was an interruption to the power supply.
- Correct the fault.
- Pump away the water and start the programme again (see procedure under “Interrupting a programme”).

The water in the wash cabinet is not heated; the programme sequence lasts too long.

This machine has a resettable heater limiter which will switch off the heaters in the case of over-heating. This could be caused for example, if large articles obscure the heating elements or if the filters in the wash cabinet are blocked.

- Remove cause of fault.
- Take off service panel (see under “Electrical connection”).

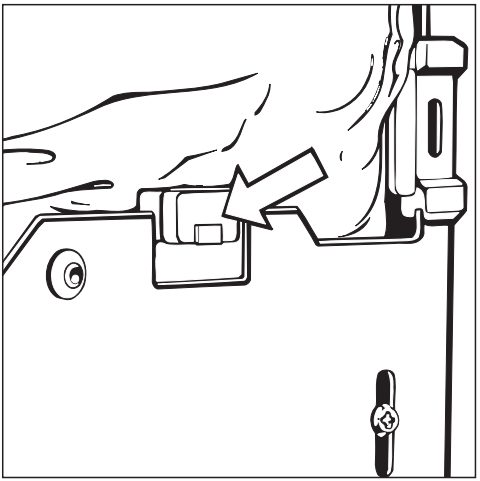

- Press in the re-set button (blue) on the heater limiter.

If this switch trips repeatedly, your Service Dealer or the Miele Service Department must be contacted.

In the event of any faults which cannot be remedied, please contact your Service Dealer or the Miele Service Department.

Please refer to the Installation diagram supplied with the machine.

The machine must be installed correctly and levelled.
Any unevenness in the floor level can be compensated by adjusting the 4 screw feet.

The machine can be installed in the following ways:

- Free standing.
- Slot-in or at the end of a row:

The machine can be installed adjacent to other equipment or furniture or in a recess at least 60 cm wide and 60 cm deep.

- Building under

The machine should be positioned under a continuous worktop. The niche dimensions must be at least 60 cm wide, 60 cm deep and 82 cm high.

The machine lid must be removed as follows:

- Open the door.

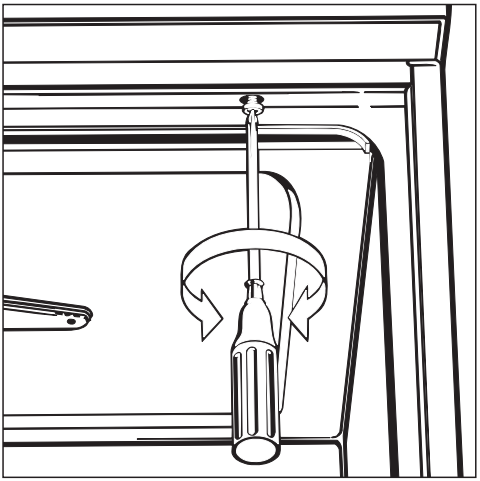

- Remove the fixing screws on the left and right, using a Philips screw driver.
- Pull the lid approximately 5 mm forwards and remove.

By removing the lid, the dishwasher can be built into a recess 82 cm high. If building the dishwasher into a recess 87 cm high, a conversion kit is required.

Important for machines with steam condensor:

To avoid steam damage to the worktop the self-adhesive protective sheet supplied (25 x 58.cm) should be stuck under the worktop in the area of the steam condensor.

Position and secure the machine

To ensure stability, the machine must first be aligned and then screwed to the worktop.

- With the door open, through each of the two holes in the front rim, left and right, screw the machine to the front edge of the continuous worktop.
- Do not use silicone sealant to seal the gaps between the machine and any neighbouring units as this would hinder ventilation to the circulation pump.

Depending on the various requirements for building under, the following kits can be ordered from the Miele spare parts department.

87 cm high recess

This kit consists of longer machine feet and a base plate.

Cover plate (worktop protection)

The underside of the work surface is protected from steam damage by a plate of 'Niro' stainless steel.

All electrical connection work must be carried out by a qualified electrician in compliance with local and national regulations.

- Connection should be made via a suitable isolator, with an on-off switch which should be easily accessible for servicing.
- For extra safety it is advisable to install a residual current device (RCD) with a trip current of 30 mA (DIN VDE 0664).

WARNING
THIS APPLIANCE MUST BE EARTHED

- For technical data see data plate or wiring diagram supplied.

The machine must only be operated with the voltage, frequency and fusing shown on the data plate.

The machine is not convertible.

The wiring diagram is to be found behind the cover plate on the left hand side, attached to the floor of the machine.

The data plate with test certification is on the rear of the machine, and on the cover plate (behind the service panel).

To remove service panel and cover plate:

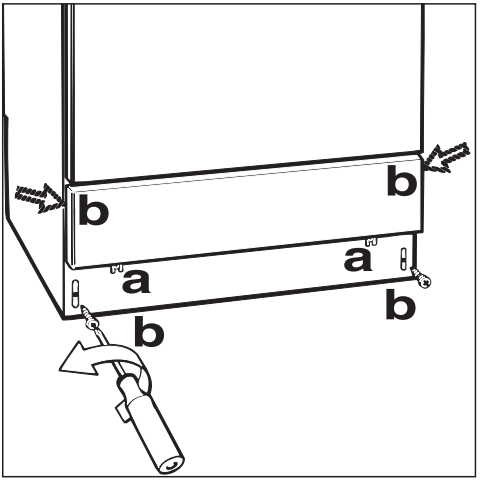

Isolate the machine from the power supply.

- Remove fixing screws “**a**” from the service panel.
- Take hold of the service panel at both sides and pull forward,up and out.
- Unscrew the cover plate, (screw “**b**“).
- Pull off earth lead if necessary.
- Remove the plastic protective cover.
- Reassemble plastic protective cover, cover plate, and service panel in reverse order.

Make certain that the earth lead is reconnected.

Refer also to the separate Installation Instructions supplied.

This page has been left blank intentionally.

Connection to the water inlet

- The machine must be connected to the water supply in accordance with the local and national regulations, (NWC in GB).
- The machine is constructed to comply with DVGW regulations, in such a way that an external non-return valve is not required.
- The water pressure (flow rate) must be between 2.5 and 10 bar. If the water pressure is not within this range, the Customer Service Department will advise you of the measures to take (see also “Programming special functions”).
- The machine is supplied as standard for connection to cold (blue markings) and hot (red markings) (max. 70°C) water supply.
  See next page for AD connection to purified water (H_20 pure).
  The inlet hoses should be connected to the stopcocks for cold and hot water.
  The inlet hose marked red is for the hot water supply, but may be connected to cold water if no hot water connection is available. In this case both hoses must be connected to the cold water supply.
  In special cases, (see Programme **E** in the chart), connection of both hoses to hot water is recommended. In order to prolong its life, the hose marked 90°C should only be used on a hot water connection supplying water no hotter than 70°C.
- Stopcocks with 3/4 “ BPS male thread to be provided on site. They should be easily accessible because the water supply must be turned off when the machine is not in use.
- The DN 10 inlet pressure hoses are approximately 1.7m long and terminate in a 3/4" female thread. On no account must the inlet filters be removed.
- For additional protection of the solenoid valve against impurities in the water supply, large surface area filters are enclosed in the kit supplied with the machine (see illustration in “Cleaning and care, water inlet”).

The filter for AD purified water is made from chrome-nickel steel and has a matt upper surface.

Consult the installation instructions supplied

The water in the machine is not suitable for drinking.

AD connection to purified water, pressurised, (1.5 - 10 bar)

The machine is delivered from the factory ready for connection to a pressurised system, 1.5 - 10 bar.

- The AD pressure tested hose, marked H_2O pure, with 3/4" thread must be connected to the on-site AD stopcock for purified water.

Connection to purified water non-pressurised (0 - 1.5 bar)

For connection to a supply of 0 - 0.3 bar, or 0.3 - 1.5 bar the machine must be converted, if not supplied converted ex-works. An "ADP" booster pump can only be fitted. This is only possible when the machine has no DHK steam condensor. As this work requires specialised knowledge, it should only be carried out by a Miele approved engineer.

The outlet of the purified water container (non-pressurised) must be at least at the height of the upper edge of the machine. (see "Installation instructions").

- Connect the non-pressurised AD water hose to the purified water container

If the AD connection to purified water is not being used (or if it should not be used) then the machine must be converted by a Miele trained or approved engineer.

Drainage

- The drainage system is fitted with a non-return valve which prevents dirty water from flowing back into the machine via the drain hose.
- The machine should preferably be connected to a separate drainage system on site. If no separate drainage system is available, seek professional advice.
- The machine is supplied with flexible drainage hoses with an internal diameter of 22 mm, and approx. 1.5 m long.
  The drain hose must not be shortened.
  Hose clips for connection are supplied.
- Longer drain hoses (up to 4 m) are available if required. Contact your Miele laboratory dealer or Spare Parts Department.
- The drainage system must not exceed 4 metres and the drain pump has a maximum delivery head of 1 metre.

Please refer to the Installation Instructions provided.

Disposal of the packing material

The transport and protective packing has been selected from materials which are environmentally friendly for disposal and can normally be recycled.

Rather than just throwing these materials away, please ensure they are offered for recycling.

Disposal of your old machine

Old machines contain materials which can be reclaimed or recycled. Please contact your dealer, local waste collection centre or scrap merchant about potential recycling schemes. Ensure that the machine presents no danger to children while being stored for disposal.

When disposing of an old machine first make it unusable. Disconnect, cut off the cable and any plug from the cable. For safety reasons ensure the machine is completely drained of any residue water and cleaning agent. (Observe safety regulations and wear safety goggles and gloves). Make the door lock inoperative so that children cannot shut themselves in. The simplest way to do this is to remove the locking pin (2 philips screws above the door). Make appropriate arrangements for the safe disposal of the machine.
Where machines with a tank system are being disposed of, all water must first be emptied from the tank.

Noise emission in dB (A)

Measurement of noise:	65

Australia:
Miele Australia Pty. Ltd., A.C.N. 005635398
1 Gilbert Park Drive, Knoxfield, VIC 3180
Telephone: (03) 9764 7100, Fax: (03) 9764 7129
Miele Australia Pty. Ltd., 3 Skyline Place, Frenchs Forest, NSW 2086
Telephone: (02) 8977 4200, Fax: (02) 8977 4219
Miele Australia Pty. Ltd., 25 Lavarack Avenue, Eagle Farm, QLD 4009
Telephone: (07) 3632 2400, Fax: (07) 3632 2449
Miele Australia Pty. Ltd., 209 Richmond Road, Richmond, SA 5033
Telephone: (08) 8351 8500, Fax: (08) 8354 1717
Distributor Western Australia:
G.B.I. Sales Pty. Ltd., 27-33 Cleaver Terrace, Belmont, WA 6104
Telephone: (08) 9478 0466, Fax: (08) 9478 0470
Distributor New Zealand:
Steelfort Engineering Company. Ltd.
500 Rangitikei Street, Palmerston North, Priv. Bag 11045, NZ
Telephone: (06) 357 1099, Fax: (06) 356 1507
Steelfort Engineering Company Ltd., Unit L, 10-20 Sylvia Park Road,
Mt. Wellington, Auckland, NZ
Telephone: (09) 573 1269, Fax: (09) 573 1268

United Kingdom:
Miele Co. Ltd.
Fairacres, Marcham Road, Abingdon, Oxon, OX14 1TW
tel. Abingdon (01235) 554455 - fax (01235) 554477
Service Office, tel. Abingdon (01235) 554466
Internet: www.miele.co.uk

Ireland:
Miele Ireland Limited
Broomhill Business Complex, Broomhill Road, Dublin 24
Tel. (01) 46 10 710, Fax (01) 46 10 797

South Africa:
Miele (Pty.) Ltd.
304 Tungsten Road, Strydom Park 2194
P.O.Box 1654, Randburg 2125
Tel. (011) 793-7452, Telefax (011) 793-7447
E-mail: mieleza@iafrica.com

Alteration rights reserved / 002 0101

This paper consists of cellulose which has been bleached without the use of chlorine.