Miele

Operating and installation instructions
Fridge-freezer



It is **essential** to read the operating and installation instructions before setup, installation, and commissioning. This prevents both personal injury and damage to the appliance.

en-GB

M.-Nr. 12 945 350

Contents

Warning and Safety instructions .. **4**

Sustainability and environmental protection **14**
How to save energy 15

Installation **17**
Fastening the refrigeration appliance in the building-in niche 17
Installation site 17
Side-by-side installation 19
Ventilation 19
Changing the door hinging 20
Mounting accessories supplied 20
Levelling rails 20
Limiting the opening angle of the appliance doors 21
Furniture door panel 21
Horizontal and vertical gaps 21
Weight of the furniture door 22
Additional guide hinge for tall furniture fronts 22
Building-in dimensions 23
Installation in a tall unit/side view 23
Connections and ventilation 24
Electrical connection 25

Familiarisation **26**
Guide to the appliance 26
Control panel with display 28
Settings mode 29
Party mode 29
Holiday mode 29
Lock function 29
Switching the refrigeration appliance off 29
Sabbath mode 29
Information on Sabbath mode 30
Time before door alarm is triggered 30
Temperature level in the PerfectFresh Pro zone 30
Networking 30
Keypad tone 30
Alarms and buzzers 30
Display brightness 30
Temperature unit °C/°F 30
Demo mode 30
Factory defaults 30
Information on the refrigeration appliance 30
Active AirClean filter display 31
Cleaning mode 31
Safety 31
Temperature alarm in the freezer zone 31
Door alarm 32
Appliance functions 33
SuperCool 33
SuperFreeze 33

Contents

Adjusting the interior fittings 34
Moving the door shelf/bottle shelf 34
Moving the adjustable shelves .. 34
Moving the bottle rack 34
Moving the split shelf 34
Sliding back the split shelf 35
Using the bottle rack in the dividing plate 35
Inserting the adapters for the baking tray 35
Creating a flexible design for the freezer zone (VarioRoom) 35
Moving the Active AirClean filter 35
Accessories supplied 36
Optional accessories 36

Commissioning **37**
Before using for the first time 37
Connecting the refrigeration appliance 37
Switching the refrigeration appliance on 37
Switching the refrigeration appliance off 37
Switching off the refrigerator section separately 37
Switching off for longer periods of time 38
Requirements for networking 39
Setting up networking for the first time 39
Performing Scan & Connect 39

Operation **40**
Temperature display 40
Temperature range in the fridge zone 40
Temperature range in the freezer zone 40
Setting the temperature in the refrigerator/freezer sections 40
Storing food in the fridge zone 42
Different storage zones 42
Should food be stored loose or in packaging? 43
Storing food in the PerfectFresh Pro zone 43
Humidity-controlled compartment 44
Dry compartment 45
Freezing and storing fresh food 47

Adjusting settings **48**

Cleaning and care **60**
Defrosting 60
Freezer zone 60
Cleaning agents 60
Preparing the refrigeration appliance for cleaning 61
Cleaning the interior of the appliance 62
Cleaning accessories by hand or in the dishwasher 62
Removing and dismantling accessories for cleaning 63
Inserting the glass shelves and drawers into the freezer section. 64
Cleaning the door seal 65
Cleaning the ventilation openings ... 65
After cleaning 65

Troubleshooting **66**
Interior lighting 74
Noises 75

Service **77**
Contact in the event of a fault 77
EPREL database 77
Warranty 77

Information **78**
EU Conformity declaration 78
UK Conformity declaration 78
Copyrights and licences 79

Warning and Safety instructions

This refrigeration appliance complies with current safety requirements. Inappropriate use can, however, lead to personal injury and material damage.
Please read the operating and installation instructions carefully before using the refrigeration appliance for the first time. They contain important information on installation, safety, use and maintenance. This is to protect yourself from injury, and from damaging your refrigeration appliance.
In accordance with standard IEC 60335-1, Miele expressly and strongly advises that you read and follow all information provided on installing the refrigeration appliance, as well as the warning and safety notes.
Miele cannot be held liable for injury or damage caused by non-compliance with these instructions.
Keep these operating and installation instructions in a safe place and pass them on to any future owner.

Correct application

▶ This refrigeration appliance is intended for use in the home and in similar environments; for example:
– In shops, offices and similar work settings
– On agricultural estates
– By the guests in hotels, motels, bed and breakfasts, and other typical home settings.
This refrigeration appliance is not intended for outdoor use.

▶ This appliance is intended for domestic use only for cooling and storing food and drink as well as for storing deep frozen food, freezing fresh food and for making ice.
Any other usage is not supported by the manufacturer and could be dangerous.

▶ This refrigeration appliance is not suitable for storing and keeping cool medicines, blood plasma, laboratory preparations or similar substances or products that are subject to the Medical Device Directive. Incorrect use of the refrigeration appliance for such purposes may cause deterioration of the items stored. The refrigeration appliance is also not suitable for use in areas where there is a risk of explosion. Miele cannot be held liable for damage caused by improper or incorrect use or operation of the appliance.

▶ The appliance can only be used by people with reduced physical, sensory or mental capabilities, or lack of experience and knowledge, if they are supervised whilst using it, or have been shown how to use it in a safe way and recognise and understand the consequences of incorrect operation.

Safety with children

▶ Children under 8 years of age must be kept away from the refrigeration appliance unless they are constantly supervised.

▶ Children 8 years and older may only use the appliance unsupervised if they have been shown how to use it in a safe way and recognise and understand the consequences of incorrect operation.

▶ Children must not be allowed to clean or maintain the appliance unsupervised.

▶ Please supervise children in the vicinity of the appliance and do not let them play with it.

▶ Danger of suffocation. Whilst playing, children may become entangled in packaging material (such as plastic wrapping) or pull the packaging material over their head, presenting the risk of suffocation. Keep packaging material away from children.

Technical safety

▶ The coolant circuit has been checked for leaks. The refrigeration appliance complies with statutory safety requirements and the appropriate EU directives.



If the cooling circuit is damaged, refrigerant and oil can escape and ignite.

▶ Warning: fire hazard/flammable materials. This symbol is on the compressor and indicates flammable materials. Do not remove this sticker.

The refrigerant inside the appliance (details on the data plate) is environmentally friendly but flammable.
The use of this refrigerant does, however, sometimes lead to a slight increase in the noise level of the appliance. In addition to the noise of the compressor, you might be able to hear the refrigerant flowing around the cooling circuit. Unfortunately, this cannot be avoided, but it does not affect the performance of the refrigeration appliance.
When transporting and installing the refrigeration appliance, ensure that no parts of the cooling circuit are damaged. Splashes of refrigerant can damage the eyes and leaking refrigerant can ignite.
In the event of damage:

- Avoid naked flames or anything which creates a spark.
- Disconnect the refrigeration appliance from the mains electricity supply.
- Ventilate the room where the refrigeration appliance is located for several minutes.
- Contact the Miele Customer Service Department.

▶ The more refrigerant there is in a refrigeration appliance, the larger the room it should be installed in. In the event of a leakage, if the appliance is in a small room, there is the danger of a combustible gas/air mixture building up. For every 8 g of refrigerant at least 1 m^3 of room space is required. The amount of refrigerant in the refrigeration appliance is stated on the data plate inside the appliance.

▶ If the ventilation cross-sections are covered or blocked, a combustible gas/air mixture can form if the cooling circuit is damaged. It is essential to observe the required ventilation cross-sections. The ventilation cross-sections must not be covered or blocked in any way.

▶ To avoid the risk of damage to the appliance, make sure that the connection data (fuse rating, frequency and voltage) on the data plate corresponds to the household supply.
Check that this is the case before connecting the appliance. Consult a qualified electrician if in any doubt.

▶ The electrical safety of this appliance can only be guaranteed when correctly earthed. It is essential that this standard safety requirement is met. If in any doubt please have the electrical installation tested by a qualified electrician.

▶ Temporary or permanent operation on an autonomous power supply system or a power supply system that is not synchronised with the mains power supply (e.g. island networks, back-up systems) is possible. A prerequisite for operation is that the power supply system complies with the specifications of EN 50160 or an equivalent standard.
The function and operation of the protective measures provided in the domestic electrical installation and in this Miele product must also be maintained in isolated operation or in operation that is not synchronised with the mains power supply, or these measures must be replaced by equivalent measures in the installation. As described, for example, in the current version of BS OHSAS 18001–2 ISO 45001.

▶ The socket must not be concealed behind the refrigeration appliance and must be easily accessible so that the appliance can be quickly disconnected from the electrical supply in case of an emergency.

▶ If the mains connection cable is damaged, disconnect the refrigeration appliance from the power supply immediately. Contact the Miele Customer Service Department.

▶ If the mains connection cable is damaged, it must only be replaced with a specific mains connection cable of the same type (available from the Miele online shop or Miele Customer Service). For safety reasons, such replacement may only be carried out by a qualified specialist or Miele Customer Service.

▶ Do not connect the appliance to the mains electrical supply by a multi-socket adapter or extension lead. These are a fire hazard and do not guarantee the required safety of the appliance.

▶ If moisture gets into electrical components or into the mains connection cable, it could cause a short circuit. Therefore, do not operate this refrigeration appliance in areas which are exposed to moisture (e.g in a garage or utility room).

▶ This appliance must not be used in a non-stationary location (e.g. on a ship).

▶ Do not use a damaged appliance. It could be dangerous. Check the appliance for visible signs of damage.

▶ For safety reasons, this appliance may only be used after it has been built in.

▶ The appliance must be isolated from the electricity supply during installation, maintenance and repair work. It is only completely isolated from the power supply when:

- the mains fuses are switched off, or
- the screw-out fuse is removed (where applicable), or
- the mains cable has been unplugged. Pull on the plug and not the cable when disconnecting it from the power supply.

▶ Unauthorised installation, maintenance or repairs could result in unforeseen dangers for the user, for which the manufacturer cannot accept liability.
Installation, maintenance or repairs must only be carried out by a qualified specialist or Miele Customer Service.

▶ The manufacturer's warranty will be invalidated if the refrigeration appliance is not repaired by a qualified specialist or Miele Customer Service.

▶ If defective safety-relevant components are replaced, Miele can only guarantee full compliance with safety requirements if genuine Miele replacement parts are used.

▶ This refrigeration appliance is fitted with a special lamp to cope with particular conditions (e.g. temperature, moisture, chemical resistance, abrasion resistance and vibration). This lamp must only be used for the purpose for which it is intended. The lamp is not suitable for room lighting. Replacement lamps may only be fitted by a qualified specialist or by Miele Customer Service. This refrigeration appliance contains several light sources with at least energy efficiency class F.

Proper installation

▶ Install the refrigeration appliance in accordance with the installation instructions.

▶ Change the door hinging (if necessary) as described in the installation instructions.

▶ Always wear protective gloves when transporting and installing the refrigeration appliance and when changing the door hinging.

▶ Only install the refrigeration appliance in a solid, rectangular and level housing unit, positioned on an even and level floor.

▶ The refrigeration appliance is heavy and can tip forwards when the appliance door(s) is/are open:

- At least 2 people are required to transport or move the refrigeration appliance.
- At least 2 people are required to change the door hinging of the refrigeration appliance.
- At least 2 people are required to install the refrigeration appliance.
- Never leave the refrigeration appliance unattended while it is being installed.
- It is essential that you secure the refrigeration appliance in the niche using the enclosed retaining and fastening parts (installation instructions).

Correct use

▶ This refrigeration appliance is designed for use within specific ambient temperatures (climate range). Do not use in ambient temperatures for which it is not designed. The climate range is stated on the data plate in the interior cabinet of the refrigeration appliance. A lower ambient temperature will cause the compressor to switch off for longer periods, meaning that the refrigeration appliance is unable to maintain the required temperature.

▶ The ventilation cross-sections must not be covered or blocked in any way. This can impair the proper ventilation of the appliance, increase the energy consumption and cause damage to the components.

▶ Risk of damage due to greasy or oily foods. If the refrigeration appliance or the appliance door is used for storing food which contains fat or oil, make sure that it does not come into contact with plastic components. Any spillages of oil or fat could cause stress cracks to the plastic and cause it to break or split.

▶ Risk of fire and explosion due to flammable mixes of gases. Do not store explosive materials in the refrigeration appliance or any products containing propellants (e.g. spray cans). Electrical components can cause flammable mixes of gases to ignite. The spray cans in question can be identified by the contents printed on the can or by a flame symbol. Electrical components can cause escaping gases to ignite.

▶ Danger of explosion. Do not operate any electrical equipment (e.g. an electric ice-cream maker) inside the refrigeration appliance. This can cause sparking and explosion.

▶ Danger of injury and damage to the appliance. Do not store cans or bottles containing carbonated drinks or liquids which could freeze in the freezer zone. Otherwise they could burst.

▶ Danger of injury and damage to the appliance. When cooling drinks quickly in the freezer zone, make sure bottles are not left in for more than one hour. Otherwise they could burst.

▶ Danger of injury. Never handle frozen food or the metal parts of the appliance with wet hands. Your hands may freeze to the frozen food or to the metal.

▶ Danger of injury. Do not take ice cubes out with your bare hands and never place ice cubes or ice lollies in your mouth straight from the freezer zone. The very low temperature of the frozen food can cause frost burn to the lips and tongue.

▶ Do not refreeze partially or fully defrosted food. Consume defrosted food as soon as possible, as it will lose its nutritional value and spoil if left for too long. Defrosted food may only be re-frozen after it has been cooked.

▶ Only use drinking water when making ice cubes.

▶ Observe the manufacturer's “use-by” dates and storage instructions given on food to avoid the risk of food poisoning. Storage times will depend on several factors, including the freshness and quality of the food, as well as the temperature at which it is stored.

▶ To ensure that fresh food placed in the freezer freezes through to the core as quickly as possible, the maximum freezing capacity must not be exceeded. The maximum freezing capacity for freezing within a 24-hour period is given on the data plate: “Freezing capacity ... kg/ 24 hrs”.

Accessories and spare parts

▶ Miele assumes no liability for the use of accessories that are not genuine Miele accessories. Miele is not liable for warranty, guarantee and/or product liability claims if damage or defects are due to the use or installation of accessories that do not originate from Miele or have not been approved by Miele.

▶ Miele original spare parts are kept in stock for at least 10 years and up to 15 years after discontinuation of your refrigeration appliance.

Cleaning and care

▶ Do not use any oils or grease on the door seals, as these will cause the seals to deteriorate and become porous with time.

▶ Do not use a steam cleaning appliance to clean or defrost this appliance.
Steam could reach electrical components and cause a short circuit.

▶ Sharp edged or pointed objects will damage the evaporator, causing irreversible damage to the appliance. Do not use sharp edged or pointed objects to

- remove frost and ice,
- separate frozen food or remove ice trays.

▶ Do not place electric heaters or candles in the appliance to defrost it. These can damage the plastic parts.

▶ Do not use defrosting sprays or de-icers. Defrosting sprays and de-icers can contain substances which could damage the plastic parts or which might cause a build-up of explosive gases and pose a danger to health.

Transport

▶ To avoid damage to the refrigeration appliance, always transport it upright and in its packaging.

▶ Danger of injury and damage to the appliance. The refrigeration appliance is very heavy and must be transported by two people.

Disposal of your old appliance

▶ Children playing could become trapped in the refrigeration appliance and could suffocate.

- Remove the appliance door(s).
- Remove the drawers.
- Leave the shelves in the refrigeration appliance so that children cannot climb inside.
- If your old refrigeration appliance has a door lock, destroy it. This will prevent the risk of children playing accidentally locking themselves in the appliance and endangering their lives.

▶ Risk of electric shock!

- Cut the plug off the mains connection cable.
- Cut the mains connection cable off the old appliance.

Dispose of the plug and mains connection cable separately from the old appliance.

▶ During and after disposal, make sure that the refrigeration appliance is not placed near petrol or other flammable gases and liquids.

▶ Risk of fire due to escaping oil or refrigerant.
The refrigerant and oil inside the appliance are flammable. In high enough concentrations, escaping refrigerant or oil can ignite if they come into contact with an external heat source.
During disposal, make sure that the cooling circuit is not damaged. This prevents refrigerant and oil escaping in an uncontrolled manner (see the data plate for details of the refrigerant).

▶ Splashes of coolant can damage the eyes. Be careful not to damage any part of the pipework whilst awaiting disposal, e.g. by

- puncturing the coolant channels in the condenser,
- bending any pipework, or
- scratching the surface coating.

Symbol on the compressor (depending on model)

This information is only relevant for recycling. There is no risk during normal operation.



▶ The oil in the compressor can be fatal if swallowed or if it penetrates the airways.

Disposing of the packaging material

The packaging material is used for handling and protects the appliance from transport damage.

Recycling the packaging material reduces the use of raw materials. Use material-specific collection points for valuable materials and take advantage of return options. Your Miele dealer will take the packaging material away.

Disposing of your old appliance

Electrical and electronic appliances contain many valuable materials. They also contain certain materials, compounds and components which were essential for their correct functioning and safety. These could be hazardous to human health and to the environment if disposed of with household waste or if handled incorrectly. Please do not, therefore, dispose of your old appliance with household waste.



Take care not to damage your refrigeration appliance before or during disposal in an authorised, environmentally friendly manner.
This is to ensure that refrigerant in the cooling circuit and oil in the compressor is contained, and will not leak into the environment.

Instead, please make use of officially designated collection and disposal points to dispose of and recycle electrical and electronic appliances in your local community, with your dealer or with Miele, free of charge. By law, you are solely responsible for deleting any personal data from the old appliance prior to disposal. You are legally obliged to remove any old batteries which are not securely enclosed by the appliance and to remove any lamps without destroying them, where this is possible. These must be taken to a suitable collection point where they can be handed in free of charge. Please ensure that your old appliance poses no risk to children while being stored for disposal.

How to save energy ...

Installation site

The refrigeration appliance has to cool more often at higher ambient temperatures and consumes more energy in the process. Therefore:

- Install the refrigeration appliance in a well-ventilated room.
- Do not install the refrigeration appliance near to a heat source (heater element, cooker).
- Protect the refrigeration appliance from direct sunlight.
- Ensure an ideal ambient temperature of 20 °C.
- Clean the ventilation openings on a regular basis to remove any dust.

Temperature setting

The colder the temperature, the higher the energy consumption. The following settings are recommended:

- 4 to 5 °C in the refrigerator section.
- PerfectFresh Pro zone just above 0 °C.
- -18 °C in the freezer zone

Use

Energy consumption is increased by heat input and impeded air circulation. Therefore:

- Only open the appliance door/appliance doors when necessary and for as short a time as possible. Arrange the food in such a way that makes it easy to find in the appliance.
- Always close the appliance door/appliance doors properly after opening.
- Allow hot food and drinks to cool down before placing them in the refrigeration appliance.
- Store food well packaged or covered.
- Do not overfill the compartments to allow air to circulate.
- Keep drawers and shelves arranged as they were when the appliance was delivered.
- Place frozen food in the fridge zone to defrost.

Defrosting

A layer of ice hinders the cold from reaching the frozen food. Therefore, you should:

- Defrost the freezer when a layer of ice 0.5 cm (max.) thick has built up.

Carry out the installation in accordance with the installation instructions (see QR code).

M.-Nr. 11668540

Ordering printed installation instructions

You can order printed installation instructions free of charge from Miele.

All the contact information you need for Miele can be found at the end of this document. Quote the model identifier and the serial number from the data plate when placing your order.

Fastening the refrigeration appliance in the building-in niche

⚠ Risk of damage and danger of injury due to the refrigeration appliance tipping over.

This refrigeration appliance is very heavy and can tip forwards when the appliance door is open.

Keep the appliance door(s) closed until the refrigeration appliance has been built in.

It is essential that you secure the refrigeration appliance in the niche using the enclosed retaining and fastening parts in accordance with the installation instructions.

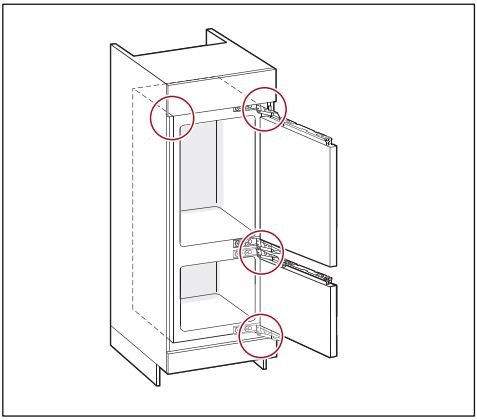

Installation site

⚠ Fire risk and risk of damage from appliances which give off heat.

Appliances which give off heat can catch fire and set fire to the refrigeration appliance.

The mains connection cable must not come into contact with heat sources.

This refrigeration appliance must not be installed underneath a hob.

⚠ Fire risk and danger of damage from open flames.

Open flames can set fire to the refrigeration appliance.

Keep open flames (e.g. a candle) away from the refrigeration appliance.

Installation

⚠ Risk of fire and damage due to improper installation.

If the mains plug and mains connection cables touch the back of the refrigeration appliance, they may be damaged by vibrations and cause a short circuit.

Mains plugs or mains connection cables must not touch the refrigeration appliance.

Mains connection cables must not be trapped or damaged.

Do not connect any other appliances to sockets located directly behind this refrigeration appliance.

Do not place or operate multi-socket adapters, distributor strips or other electronic devices (such as halogen transformers) behind the appliance.

This appliance should be installed in a dry, well-ventilated room.

Only install the refrigeration appliance in a solid, rectangular and level housing unit, positioned on an even and level floor.

⚠ Risk of damage due to high humidity.

In environments with high humidity, condensation can build up on external refrigeration appliance panels. This condensation can cause corrosion on external appliance panels.

Install the refrigeration appliance in a dry and/or air-conditioned room with sufficient ventilation.

After installation, please make sure that the appliance door/appliance doors closes/close properly and the refrigeration appliance is installed in accordance with these installation instructions. It is essential to comply with the specified ventilation cross-sections.

When deciding on the installation site, please bear in mind that your refrigeration appliance will consume more energy if installed near to a heater, a cooker or another appliance that gives off heat. Avoid direct sunlight. Higher ambient temperatures increase energy consumption as the compressor runs for longer.

Climate range

This refrigeration appliance is designed for use within specific ambient temperatures (climate range). Do not use in ambient temperatures for which it is not designed. The climate range is stated on the data plate in the interior cabinet of the refrigeration appliance.

Climate range	Ambient temperature
SN	10 to 32 °C
N	16 to 32 °C
ST	16 to 38 °C
T	16 to 43 °C
SN-ST	10 to 38 °C
SN-T	10 to 43 °C

A lower ambient temperature leads to the compressor switching off for longer periods. This can cause the internal temperature in the refrigeration appliance to rise with the risk of food deteriorating and going off.

Side-by-side installation

⚠ Risk of damage due to condensation on external appliance panels.

In environments with high humidity and a lack of ventilation, condensation can build up on external appliance panels, which can cause corrosion.

Do not place refrigeration appliances directly next to or on top of one another if the refrigeration appliance is not approved for this.

Your refrigeration appliance can possibly be installed alongside another refrigeration appliance with an integrated heating unit if each appliance is built into a separate niche.

Tip: Please contact your dealer for specific information about which combinations will work with your refrigeration appliance.

Ventilation

⚠ Fire risk and risk of damage due to inadequate ventilation.

If the refrigeration appliance is not ventilated sufficiently, the compressor will run more frequently and for longer periods. This causes increased energy consumption and an increased compressor operating temperature, which can result in damage to the refrigeration appliance.

Please ensure that there is adequate ventilation around the refrigeration appliance:

It is essential to observe the required ventilation cross-sections.

The ventilation cross-sections must not be covered or blocked in any way.

Clean the ventilation areas regularly to remove dust and dirt.

Air at the back of the refrigeration appliance gets warm. The appliance housing unit must therefore be constructed to allow sufficient space for ventilation (see “Installation dimensions” and the installation instructions).

Changing the door hinging

⚠ Danger of injury and damage to the appliance due to heavy door.
There is an increased risk of injury and damage if the door hinging is installed by a single person.
Always change the door hinging with the help of a second person.

⚠ Risk of crushing on the door hinge.
Fingers can get trapped in or around the hinge.
Leave the door hinge open and do not close it.
Do not reach into the door hinge during conversion.

Change the door hinge in accordance with the installation instructions.

Mounting accessories supplied

Install the refrigeration appliance in accordance with the installation instructions.

Levelling rails

These are enclosed from a niche height of 1400 mm.

The noise level is reduced when they are installed.

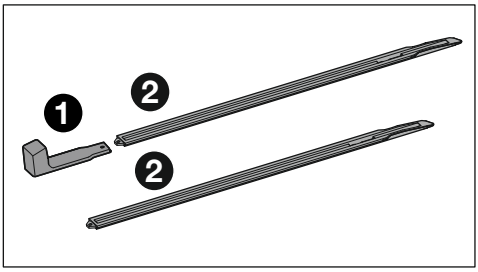

1 – installation handle, 2 – levelling rails

Slide the two levelling rails underneath the refrigeration appliance using the installation handle (see installation instructions).

Limiting the opening angle of the appliance doors

The door hinges are set to enable the appliance doors to be opened wide.

If required, the opening angle can be limited to approx. 90° using the enclosed pins.

The locking pins for limiting the door opening must be fitted before the refrigeration appliance is installed.

The fridge zone door must be taken off in order to insert the pins into the upper hinge of the freezer zone door (see the installation instructions).

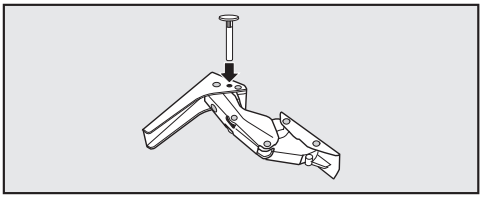

- Insert the pin into the door hinge from above.

Furniture door panel

Horizontal and vertical gaps

Depending on the style of kitchen furniture, the thickness and edge radius of the furniture door panel and the gap that runs around the door, vertically and horizontally, are specified.

It is essential to pay attention to the following:

- **Horizontal gap**

The gap between the furniture door panel and the housing unit door above or below it must be at least 3 mm.

- **Vertical gap**

If the joint gap between the refrigeration appliance furniture door panel and adjoining kitchen furniture front or wall on the hinged side is too small, the refrigeration appliance door may collide with it when opened.

Check the furniture door panel for any collisions.

Determine the required joint gap width based on the thickness and edge radius of the furniture door panel.

This must be taken into consideration when planning your kitchen and when replacing an old refrigeration appliance with a new one to ensure the installation conditions required are met.

Appliance furniture door thickness **A** [mm]	Gap **X** [mm] for different edge radii **B**			
	R0	R1.2	R2	R3
≥16–19	min. 3			
20	5	4	4	3.5
21	5.5	5	4.5	4
22	6.5	6	5.5	5

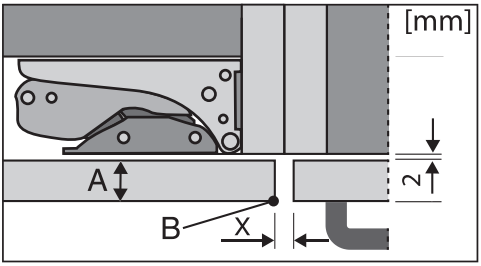

Adjoining kitchen furniture front

A = Furniture front thickness
B = Edge radius
X = Gap

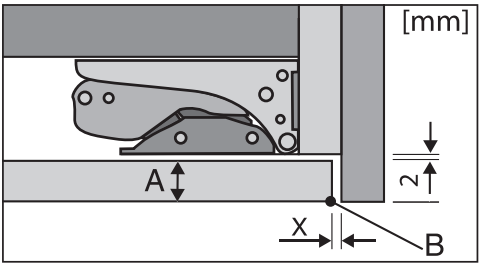

Adjoining side wall

A = Furniture front thickness
B = Edge radius
X = Gap

Tip: Fit a spacer between the housing unit carcase and the side wall. This way you will get a sufficiently wide gap.

Weight of the furniture door

⚠ If the furniture door panel is too heavy, this can cause damage.
Fitting a furniture door panel which is heavier than the maximum permitted weight could damage the hinges. This can cause subsequent functional problems.

The maximum permissible weights of the furniture doors in kg are:

Refrigeration appliance	Upper furniture door panel	Lower furniture door panel
KF 7742 ...	18	12

Additional guide hinge for tall furniture fronts

If you are using a tall furniture front that extends **significantly** beyond the refrigeration appliance, we recommend installing an additional guide hinge.

Please note that this guide hinge (a special type of furniture hinge) has the same pivot point as the door hinge on the refrigeration appliance.

The guide hinge helps to guide the door's movement more effectively and provides the necessary stability.

Building-in dimensions

Installation in a tall unit/side view

Before installation, ensure the housing unit dimensions are the correct size. The refrigeration appliance will function correctly if the specified ventilation cross-sections are maintained.

All dimensions are given in mm.

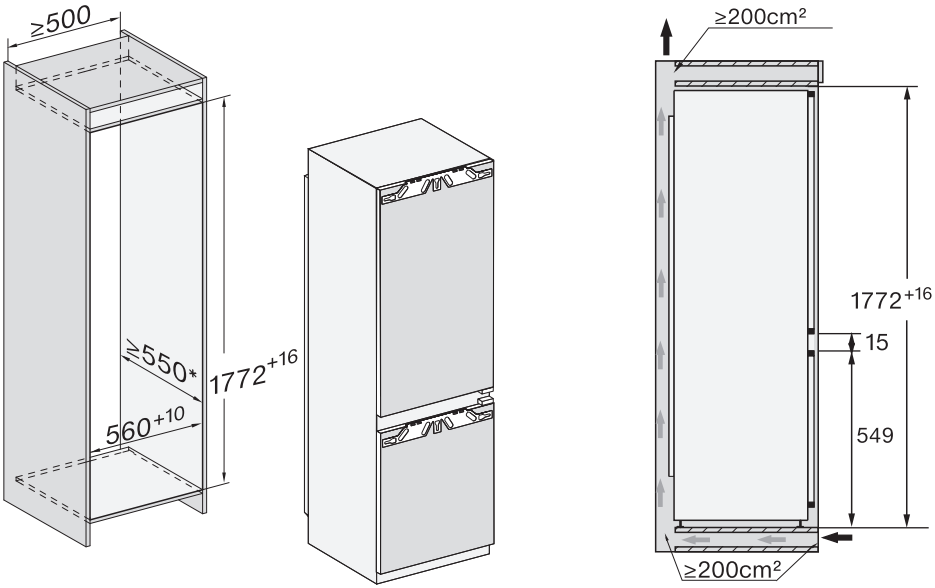

* The declared energy consumption was calculated in a 560 mm deep niche. The refrigeration appliance is fully functional in a 550 mm niche but the energy consumption will be slightly higher.

Installation

Connections and ventilation

Before installation, ensure the housing unit dimensions are the correct size. The refrigeration appliance will function correctly if the specified ventilation cross-sections are maintained.

All dimensions are given in mm.

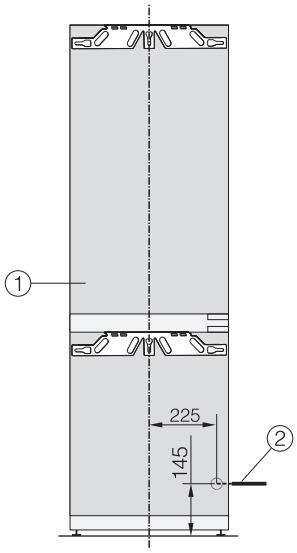

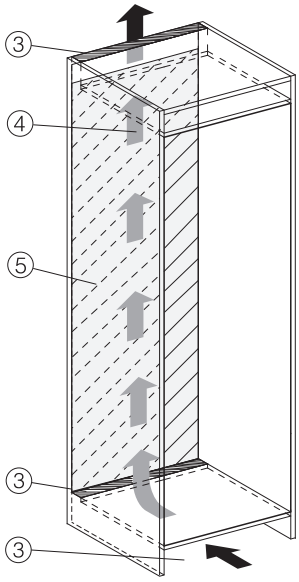

① Front view

② Mains connection cable, length = 2200 mm
A longer mains connection cable is available to order from the Miele Customer Service Department.

③ Ventilation cross-section min. 200 cm^2

④ Ventilation

⑤ No connection sockets in this area

Electrical connection

The refrigeration appliance must only be connected to an earthed socket using the mains connection cable supplied.

The socket must be easily accessible after the refrigeration appliance has been installed. If the socket is not easily accessible, ensure that a suitable means of disconnection is provided on the installation side for each pole.

⚠ Risk of fire from overheating.
Connecting the refrigeration appliance to a multi-socket plug adapter or to an extension lead can overload the cable.
For safety reasons, do not use an extension lead or multi-socket adapter.

The electrical installation must comply with VDE 0100 requirements.

For safety reasons, we recommend using a type ⎓ residual current device (RCD) in the assigned electrical installation for connecting the refrigeration appliance.

If the mains connection cable is damaged, it must only be replaced with a specific mains connection cable of the same type (available from the Miele Customer Service Department). For safety reasons, such replacement may only be carried out by a qualified specialist or the Miele Customer Service Department.

These operating instructions and the data plate indicate the nominal power consumption and the appropriate fuse rating. Compare this information with the data of the on-site electrical connection. If in any doubt, consult a qualified electrician.

Temporary or permanent operation on an autonomous power supply system or a power supply system that is not synchronised with the mains power supply (e.g. island networks, back-up systems) is possible. A prerequisite for operation is that the power supply system complies with the specifications of EN 50160 or an equivalent standard. The function and operation of the protective measures provided in the domestic electrical installation and in this Miele product must also be maintained in isolated operation or in operation that is not synchronised with the mains power supply, or these measures must be replaced by equivalent measures in the installation. As described, for example, in the current version of VDE-AR-E 2510-2.

Connecting the refrigeration appliance

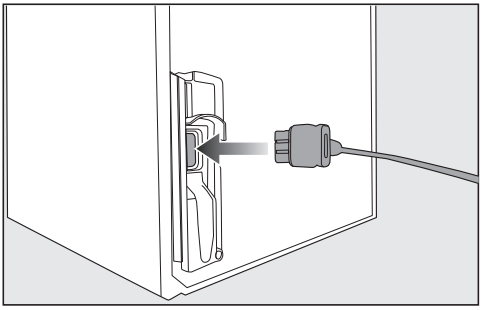

- Insert the plug connector into the socket at the back of the refrigeration appliance.

Make sure that the plug connector has clicked into position correctly.

- Insert the plug of the refrigeration appliance into the socket.

The refrigeration appliance is now connected to the electricity supply.

Guide to the appliance

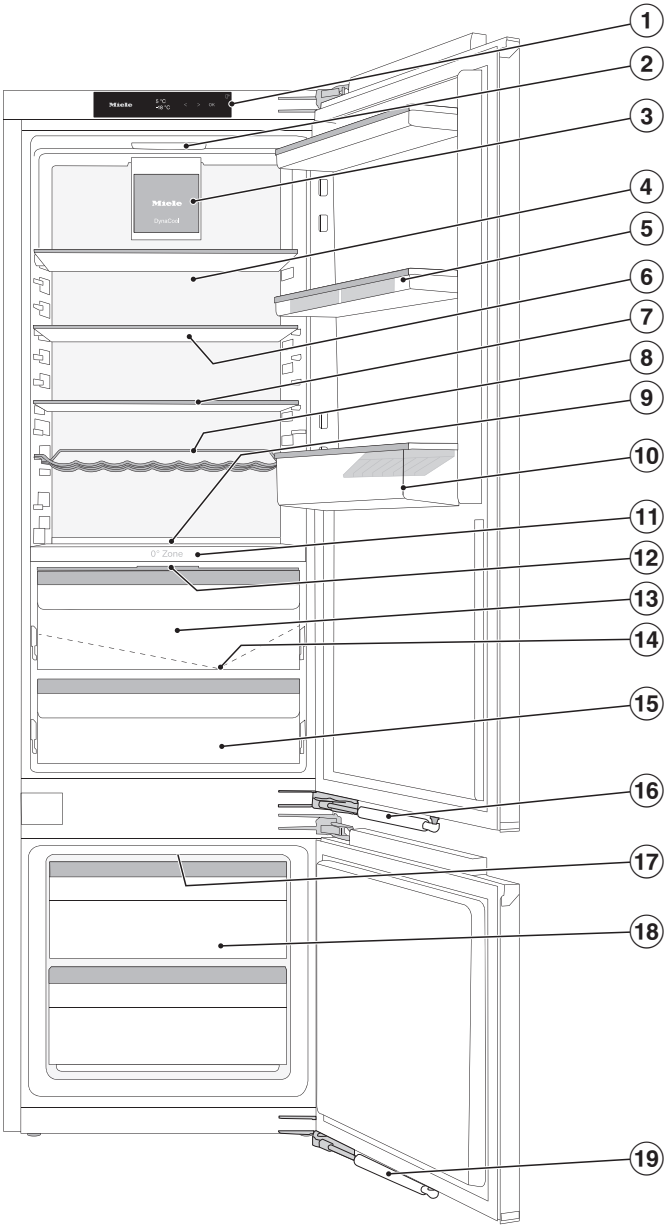

This drawing is for illustration purposes only.

① Display

② Interior lighting

③ Fan (DynaCool)

④ Dry rear panel to prevent condensate

⑤ Shelf with egg tray in the appliance door

⑥ Split shelf (FlexiBoard):
Slide the front section of the glass plate backwards to create space for tall containers in the front area.

⑦ Adjustable shelf

⑧ Flexible bottle rack

⑨ Space for a baking tray (ComfortSize)

⑩ Bottle shelf with bottle holder:
You can move the bottle holder to the right or left to create space for drinks cartons.

⑪ Dividing plate with bottle rack

⑫ Compartment cover for setting the humidity:
The humidity level is increased depending on the position of the compartment cover: ◊ not increased or ◊◊◊ increased.

⑬ PerfectFresh Pro zone (humidity-controlled compartment, can also be used as a dry compartment):
Store fruit and vegetables here at 0 to 3 °C and with an ideal humidity setting ◊◊◊.

⑭ Condensate channel and condensate drain hole:
Precipitated condensate runs off and evaporates automatically.

⑮ PerfectFresh Pro zone (dry compartment):
Store dairy products, meat and fish here at 0 to 3 °C.

⑯ Soft-close mechanism (SoftClose)

⑰ Space for enclosed ice packs

⑱ Freezer drawers

⑲ Soft-close mechanism (SoftClose)

Familiarisation

Control panel with display

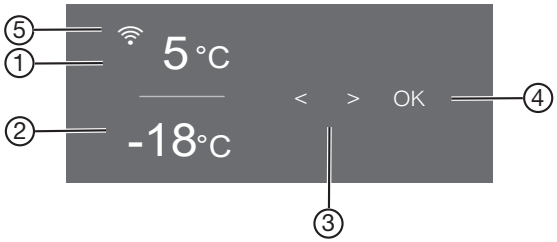

① Temperature display for fridge zone

② Temperature display for freezer section

③ Sensor controls for selecting a setting

④ *OK* sensor control for confirming a selection and entering Settings mode ⚙

⑤ Display for connection status (only visible if the network has been set up)

Settings mode

Party mode

The Party mode function is recommended if you wish to chill or freeze large amounts of fresh food or drink quickly.

The Party mode function should be switched on around 4 hours before placing food in the freezer.

The Party mode function will switch itself off automatically after approx. 24 hours.

If there is a power cut, the Party mode function is switched off.

Holiday mode

The Holiday mode function is useful when you go on holiday and, for example, you do not wish to switch off the fridge zone completely or do not need a high degree of cooling (see “Adjusting settings”).

When Holiday mode is switched on, the fridge zone is regulated at a temperature of 15 °C, which automatically sets the temperature in the PerfectFresh Pro zone to between 9 and 12 °C. In this way, the fridge zone remains in operation whilst saving energy.

The freezer zone remains switched on at the previously set temperature.

Food which does not go off quickly can be stored in the refrigeration appliance for some time at this moderate fridge zone temperature. Energy consumption is lower than in the normal operating mode.
This also prevents the build-up of odours and mould, which can occur if the fridge zone is switched off and the appliance door is closed.

Lock function

When the lock function is switched on, it protects the refrigeration appliance from being switched off unintentionally and being adjusted unintentionally by unauthorised persons, e.g. children.

If you just want to quickly adjust the temperature, for example, you can deactivate the lock function temporarily.

Switching the refrigeration appliance off

See “Commissioning – Switching off the refrigeration appliance”.

Sabbath mode

The refrigeration appliance offers a Sabbath mode for the purposes of religious observance.

When Sabbath mode is switched on, the following are deactivated temporarily:

- Interior lighting when the appliance door is opened
- All visual and audible signals
- The display
- Reminders (e.g. Active AirClean filter display): the set time interval is paused

All other functions switched on previously remain activated.

When Sabbath mode is switched on, you cannot make any settings on your refrigeration appliance.

Information on Sabbath mode

You can call up the Sabbath mode version here.

Time before door alarm is triggered

You can set the time before the appliance door alarm is triggered here.

Temperature level in the PerfectFresh Pro zone

The temperature in the PerfectFresh Pro zone is automatically controlled between 0 and 3 °C.

However, if you would like it to be warmer or colder, e.g. when storing fish, you can adjust the temperature slightly in increments (see “Adjusting settings”).

Networking

Here you can set up networking for the first time, deactivate and activate the WiFi or reset the network configuration (see “Adjusting settings”).

Keypad tone /

You can switch the keypad tone on or off here (see “Adjusting settings”).

Alarms and buzzers /

You can change the volume of the alarms and buzzers (e.g. in the event of a door alarm or a fault message) here. Alternatively, you can switch the alarms and buzzers off completely if you find them annoying (see “Adjusting settings”).

Display brightness

You can adjust the display brightness to the lighting conditions in the room here.

Temperature unit °C/°F

You can set the required temperature unit (°Celsius or °Fahrenheit) here.

Demo mode

You can switch off demo mode here if it has been switched on as a default setting (will appear on the display).

Demo mode allows the refrigeration appliance to be presented in the dealer showroom without the cooling system being switched on. This setting is not needed for domestic use.

Factory defaults

You can reset the refrigeration appliance‘s settings to the default settings.

Tip: Reset the refrigeration appliance’s settings to the default settings when disposing of your refrigeration appliance, selling it or putting a used refrigeration appliance into operation. Depending on the model, this will reset the network configuration so that your personal data is deleted from the refrigeration appliance. This will also ensure that a previous owner is no longer able to access the refrigeration appliance.

Information on the refrigeration appliance

You can call up the model identifier and serial number of your refrigeration appliance here.

Keep this appliance data to hand:

- For integrating the refrigeration appliance into your WiFi network
- When reporting an appliance fault to the Miele Customer Service Department
- When retrieving information from the EPREL database

Active AirClean filter display

Filtering the air through the Active AirClean filter ensures that the air remains free from odours.

The Active AirClean filter display will remind you approx. every 6 months that the Active AirClean filters have to be replaced (see “Cleaning and care – Replacing the Active AirClean filter (active charcoal filter)”).

You can activate the Active AirClean filter display here (see “Adjusting settings”).

Cleaning mode

The cleaning mode function makes it easier to clean the fridge zone.

The interior lighting remains switched on, even though the fridge zone is switched off. Audible and visual signals are likewise switched off.

Safety

Temperature alarm in the freezer zone

The refrigeration appliance has been fitted with a temperature alarm so that the temperature in the freezer zone cannot rise unnoticed.

If the temperature becomes too warm, will light up red in the temperature display of the freezer zone. An alarm will also sound until the cause of the alarm is rectified or the alarm is switched off.

The set temperature determines when the appliance recognises a temperature as being too warm.

The audible and visual signals may be activated in the following situations:

- You switch on the refrigeration appliance and the temperature in the freezer zone differs greatly from the set temperature.
- Too much warm ambient air enters the freezer when you are rearranging or taking out frozen food.
- You are freezing large amounts of food at once.
- You are freezing warm food.
- There was a power cut.
- The refrigeration appliance has a fault.

⚠ Health risk caused by decomposing food.
If the temperature in the freezer remains above -18 °C for a long time, the frozen food can start to defrost. This will reduce the storage life of the food.
Check whether the frozen food has started to defrost. If it has, check that the food is safe to use and if it is, then use it as soon as possible or cook it before freezing it again.

Switching the temperature alarm off early

Before you switch the temperature alarm off, you must determine the cause and rectify it.

If you are bothered by the sound of the alarm, you can switch the alarm off early.

■ Tap *OK*.

The symbol will go out and the alarm will stop.

The warmest temperature recorded in the freezer zone will flash for about 1 minute in the temperature display for the freezer zone. Then the temperature display will change to the current temperature in the freezer zone.

Door alarm

The refrigeration appliance is fitted with a door alarm to avoid increased energy consumption and refrigerated items becoming warm if the door is left open.

If an appliance door is left open for a longer period of time, will light up yellow on the relevant temperature display. An alarm will also sound and the interior lighting will flash.

You can change the time before the door alarm is triggered. The door alarm's audible signal can also be switched off.

The alarm will stop and will go out on the display as soon as the appliance door is closed.

Switching the door alarm off early

■ Tap *OK*.

goes out and the alarm will stop. The interior lighting will light up constantly.

If the appliance door is not closed, the door alarm will sound again after around 1 minute.

Appliance functions

SuperCool ❄

When switched on, the SuperCool function ❄ can be used to rapidly reduce the temperature in the **fridge zone** to its lowest setting (depending on the ambient temperature). The refrigeration appliance will work at full power and lower the temperature. Select this function for the rapid chilling of large amounts of fresh food or drink.

When the SuperCool ❄ function is switched on, the appliance may make more noise than usual.

The SuperCool function ❄ should be switched on **4 hours before** placing food or drinks in the refrigerator section.

The SuperCool ❄ function will switch itself off automatically after approx. 18 hours. The refrigeration appliance will then run at normal power again.

Tip: To save energy, you can switch the SuperCool ❄ function off yourself once food and drinks are sufficiently chilled.

SuperFreeze ❄

When switched on, the SuperFreeze function ❄ can be used to rapidly reduce the temperature in the **freezer zone** to its lowest setting (depending on the ambient temperature). The refrigeration appliance will work at full power and lower the temperature. Select this function before freezing fresh food. This helps food to freeze quickly and retain its nutrients, vitamins, flavours and appearance.

The SuperFreeze ❄ function must be switched on approx. **6 hours before the food to be frozen is placed in the freezer** (see “Operation” section, “Switching on SuperFreeze ❄”). When you are freezing the **maximum amount of food**, the SuperFreeze function ❄ should be switched on **24 hours beforehand**.

The SuperFreeze function ❄ will switch itself off automatically after a maximum of 72 hours. The quantity of fresh food placed in the freezer will determine the duration before it switches off.

Adjusting the interior fittings

Moving the door shelf/bottle shelf

Only move the door/bottle shelves in the appliance door when they are empty.

- Push the door/bottle shelves upwards, then remove them by pulling them forwards.
- Replace the door/bottle shelves at the required height.

Moving the adjustable shelves

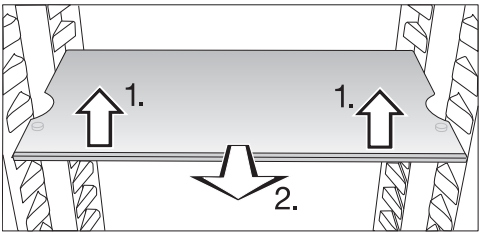

- Raise the shelf slightly at the front and pull it forwards a little.
- Lift it until the notches at the side are in line with the shelf supports. The shelf can then be raised or lowered to the required level.
- Push the shelf in.

Stoppers prevent the shelves from being dislodged by mistake.

Moving the bottle rack

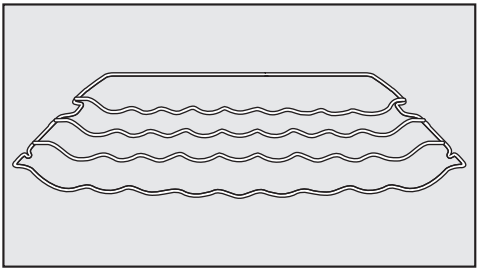

The bottle rack can be placed at different positions in the refrigeration appliance.

- Raise the bottle rack slightly at the front, and pull it forwards a little until the notch at the side is in line with the shelf support. It can then be raised or lowered to the required level.

The rear rail must face upwards to prevent bottles from touching the back of the appliance.

Stoppers prevent the bottle rack from being dislodged by mistake.

Moving the split shelf

- Take both sections of the glass plate out of the appliance.

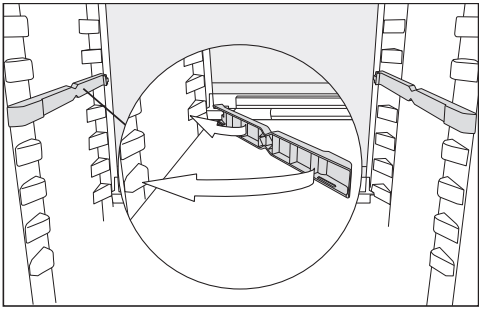

- Attach the two adapters to the support ribs on the left and right at the desired height.

The section of the glass plate with the raised edge must be fitted at the back.

Sliding back the split shelf

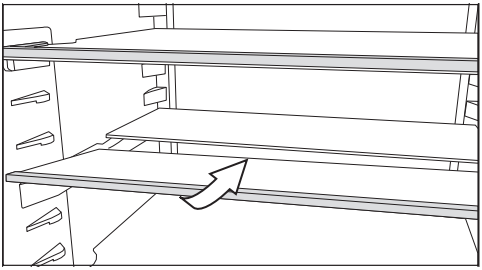

- Lift up the front section of the glass plate slightly at the front and slide it carefully underneath the rear section.

Using the bottle rack in the dividing plate

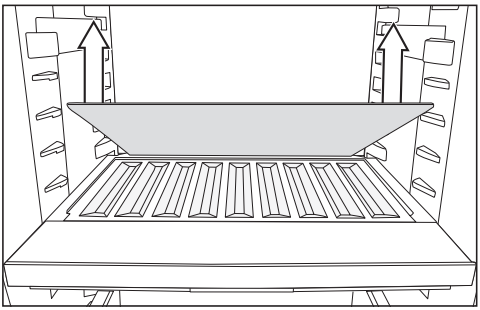

- Remove the glass shelf at the back of the dividing plate and keep it in a safe place.
- Place the bottles as far back as possible with the bases at the back of the appliance.

Tip: If the bottles hang over the edge of the bottle rack, adjust the bottom bottle shelf in the door by moving it upwards.

Inserting the adapters for the baking tray

The baking tray can be no more than 466 mm wide, 386 mm deep and 50 mm high.

- Snap the adapters into place on the lowermost shelf supports on the side walls of the fridge zone.
- Open the appliance door as far as it will go.

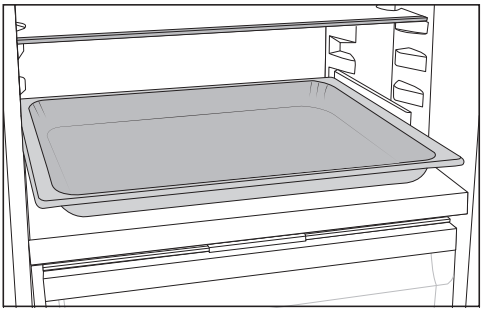

- Place the baking tray on the adapters in the fridge zone and slide it in as far as it will go.

Creating a flexible design for the freezer zone (VarioRoom)

If you wish to freeze large items such as a turkey or game, you can remove the upper freezer drawers and the glass plates between the freezer drawers. This creates more volume and space for storing bulky and tall items of frozen food.

Moving the Active AirClean filter

The holder for the Active AirClean filters sits on a protective strip at the back of the shelf.

- To move the Active AirClean filter, pull it upwards to remove it from the protective strip.
- Then pull the protective strip off the shelf.
- Refit it on the shelf you wish to use it on.

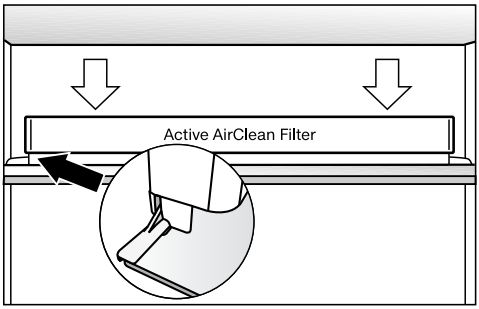

- Refit the Active AirClean filter on the protective strip.

Accessories supplied

Ice pack

Ice cube tray

Egg tray

Flexible bottle rack

Bottle holder

Optional accessories

A range of useful Miele accessories and care products are available for your appliance.

Products specially tailored to your refrigeration appliance – such as appliance care products and accessories – are available from the Miele online shop, from Miele Customer Service or from your Miele specialist dealer.

You can access the Miele online shop via the following QR code:

Before using for the first time

- Remove all packaging material and protective foil.
- Remove all advertising materials and labels from the inside of the refrigeration appliance.
- Clean the inside of the appliance and the accessories.

Connecting the refrigeration appliance

- Connect the refrigeration appliance to the mains power supply as described in “Installation – Electrical connection”.

Miele will appear on the display, followed by the ⏻ symbol.

Switching the refrigeration appliance on

- Open the appliance door.
- Touch the *OK* sensor control on the control panel.

The refrigeration appliance will start to cool and the interior lighting will come on when the appliance door is opened.

When the set freezer temperature is reached, the 🌡⚠ symbol disappears, the temperature display of the freezer section lights up constantly and the alarm stops.

- If the alarm annoys you, tap *OK*.

The alarm will stop.

The appliance will gradually reach the pre-set temperatures.

To enable the temperature to get sufficiently cold inside the refrigeration appliance, allow the appliance to run for a few hours before placing food in it. Do not place food in the refrigeration appliance until it has reached the preset temperature.

Do not place food in the freezer zone until it has reached the preset temperature (min. -18 °C).

Switching the refrigeration appliance off

You can only switch the entire refrigeration appliance off in Settings mode ⚙.

- Touch the *OK* sensor control on the control panel.

▮ will appear in the display (refrigerator section is selected).

- Use the < or > sensor control to scroll to the ⚙ symbol.
- Touch *OK*.
- Use the < or > sensor control to scroll to the ⏻ symbol.
- Touch *OK*.

The cooling and interior lighting are switched off.

⏻ will appear in the display.

Please note: The refrigeration appliance is not disconnected from the mains power supply when it is switched off.

Switching off the refrigerator section separately

The refrigerator section can be switched off without having to switch off the freezer section. This is useful, e.g. whilst on holiday.

- Touch the *OK* sensor control on the control panel.

will appear in the display (refrigerator section is selected).

- Touch *OK*.
- Use the < sensor control to scroll to the ⏻ symbol.
- Touch *OK*.

The temperature display for the refrigerator section will go out. ⏻ will appear in the display.

The refrigerator section is switched off.

The temperature display for the freezer section remains lit up.

Switching the refrigerator section back on again separately

- Touch *OK*.

will appear in the display (refrigerator section is selected).

- Touch *OK*.
- Use the > sensor control to scroll to the temperature you want and touch *OK*.

The refrigerator section switches back on.

Switching off for longer periods of time

If, during a long absence, the refrigeration appliance is switched off but not cleaned and the door is left shut, there is a danger of mould building up inside the appliance.

It is essential to clean the refrigeration appliance.

If the refrigeration appliance is not going to be used for a longer period of time, observe the following:

- Empty the refrigeration appliance completely.
- Switch the refrigeration appliance off.
- Pull the mains plug out of the socket or disconnect the fuse.
- Defrost the freezer zone.
- Clean the refrigeration appliance.
- Leave the door open to ensure the appliance is aired sufficiently and to prevent odours from developing.

It is also advisable to carry out the last two instructions if you are switching the refrigerator section off for a longer period of time.

Requirements for networking

Note the following requirements for networking:

1. A home network is available at the installation site.
   Have the WiFi password ready.
2. The Miele app is available on a mobile device.
3. You have a user account in the Miele app.

Miele App

The Miele App is available to download free of charge from the Apple App Store® or from the Google Play Store™.

Download on the App Store

ANDROID APP ON Google Play

Setting up networking for the first time

- Tap *OK*.

will appear in the display.

- Use the < or > sensor control to scroll to the ⚙ symbol.
- Tap *OK*.
- Use the < or > sensor control to scroll to the ⓐ symbol.
- Tap *OK*.
- Use the < and > sensor controls to select the connection method you wish to use (app or WPS).
- Tap *OK*.
- **To leave Settings mode** ⚙, use the < or > sensor control to scroll to the ⮌ symbol.
- Tap *OK*.
- Use the < or > sensor control to scroll to the ⮌ symbol and tap *OK*.

After you have successfully logged in, ᯤ will appear in the display.

If a connection could not be created, ⊗ will appear.

Start the process again.

Performing Scan & Connect

- Scan the QR code.

If you have installed the Miele app and have a user account, you will be taken directly to the networking steps.

If you have not yet installed the Miele app, you will be taken to the Apple App Store® or the Google Play Store™.

- Install the Miele app and set up a user account.
- Scan the QR code again.

The Miele app will guide you through the setup process.

(depending on the model)

Temperature display

In normal operation, the temperature display shows the **current average refrigerator section temperature** and the **maximum freezer section temperature**.

Depending on the ambient temperature and the temperature setting, it can take the appliance a few hours to reach the temperature required and for this temperature to then be shown as a constant temperature on the display.

The temperature in the refrigeration appliance will always **rise**:

- The more often the appliance door is opened and the longer it is kept open.
- The more food is stored in it.
- The warmer the food is which is being put into it.
- The higher the ambient temperature surrounding the refrigeration appliance. This refrigeration appliance is designed for use within specific ambient temperatures (climate range). Do not use in ambient temperatures for which it is not designed.

Temperature range in the fridge zone

We recommend a temperature of **4 °C** in the fridge zone.

A temperature setting of 4 °C combined with appropriate hygiene measures delays the propagation of bacteria, e.g. salmonella and listeria, which can lead to serious food poisoning.

The **temperature in the fridge zone** can be adjusted from **3 to 9 °C**.

The **temperature in the PerfectFresh Pro zone** is automatically controlled between **0 and 3 °C**. If necessary, you can adjust the temperature slightly in increments (see “Adjusting settings”).

Temperature range in the freezer zone

⚠ Health risk caused by decomposing food.
To freeze fresh food, a temperature of **-18 °C** is required. Please note that, if the temperature is any warmer, the food will have a shorter shelf life.

When freezing food and storing it over the long term, set a minimum temperature of **-18 °C**.

Tip: By keeping the freezer zone at a constant temperature of -18 °C and taking appropriate hygiene measures you can maximise the storage life of your food and avoid food waste.

The **temperature in the freezer zone** can be adjusted from **-15 °C to -26 °C**.

Setting the temperature in the refrigerator/freezer sections

- Touch the *OK* sensor control on the control panel.

will appear in the display (refrigerator section is selected).

- Use the < and > sensor controls to change the selected temperature zone if required.
- Touch *OK*.

- Use the < and > sensor controls to change the temperature.
- Touch *OK*.

The temperature display will then change back to the current temperature in the relevant temperature zone.

Switching on SuperCool ❄

The SuperCool ❄ function should be switched on **4 hours before** placing food or drinks in the appliance.

When the SuperCool ❄ function is switched on, the appliance may make more noise than usual.

- Touch the *OK* sensor control on the control panel.

▮ will appear in the display (fridge zone is selected).

- Tap *OK*.
- Use the < sensor control to scroll to the ❄ symbol.
- Tap *OK*.

When the SuperCool function ❄ is **switched on**, a dot appears in the upper corner of the display •.

- Use the > sensor control to scroll to the temperature you want and touch *OK*.

Switching off SuperCool ❄

The SuperCool ❄ function will switch itself off automatically after approx. 12 hours. The refrigeration appliance will then run at normal power again.

Tip: To save energy, you can switch the SuperCool ❄ function off yourself once food and drinks are sufficiently chilled.

- Touch the *OK* sensor control on the control panel.

▮ will appear in the display (fridge zone is selected).

- Tap *OK*.
- Use the < sensor control to scroll to the ❄ symbol.
- Tap *OK*.

When the SuperCool function ❄ is **switched off**, the dot in the upper corner of the display • disappears.

- Use the > sensor control to scroll to the temperature you want and touch *OK*.

Switching SuperFreeze ❄ on

The SuperFreeze function should be switched on around **6 hours before placing food** in the freezer. If you are freezing the **maximum amount of food**, the SuperFreeze function should be switched on **24 hours** beforehand.

You do **not** need to switch on the SuperFreeze function:

- If you are placing food that is already frozen in the freezer.
- If you only freeze up to 2 kg of fresh food daily.

When the SuperFreeze function is switched on, the appliance may make more noise than usual.

- Touch the *OK* sensor control on the control panel.

▮ will appear in the display (fridge zone is selected).

- Use the > sensor control to scroll to the ▮ symbol.
- Tap *OK*.

- Use the < sensor control to scroll to the ❄ symbol.
- Tap *OK*.

When the SuperFreeze function is **switched on**, a dot appears in the upper right-hand corner of the display •.

- Use the < and > sensor controls to scroll to the temperature you want and touch *OK*.

Switching SuperFreeze ❄ off

The SuperFreeze function ❄ will switch itself off automatically after a maximum of 72 hours.

Tip: To save energy, you can switch off the SuperFreeze function early yourself once food and drinks are sufficiently chilled.

- Touch the *OK* sensor control on the control panel.

▮ will appear in the display (fridge zone is selected).

- Use the > sensor control to scroll to the ▮ symbol.
- Tap *OK*.
- Use the < sensor control to scroll to the ❄ symbol.
- Tap *OK*.

When the SuperFreeze function ❄ is **switched off**, the dot in the upper right corner of the display disappears •.

- Use the < and > sensor controls to scroll to the temperature you want and touch *OK*.

Storing food in the fridge zone

Different storage zones

Due to natural air circulation, there are different temperature regions in the refrigerator section.

Cold, heavy air sinks to the lowest section of the refrigeration section. Make use of the different zones when placing food in the appliance.

This is a refrigeration appliance with automatic temperature distribution (DynaCool). The refrigeration appliance switches the fan on automatically when the cooling system for the fridge zone switches on. This means that the cold is distributed evenly in the fridge zone and the difference between the various temperature zones is less pronounced. All stored food is thus cooled to approximately the same temperature.

Warmest area

The warmest area in the refrigerator section is at the top in the front area and in the door. Use this for storing butter and cheese.

Coldest area

The coldest area in the fridge zone is directly above the PerfectFresh Pro zone dividing plate and at the back of the appliance. The temperature in the PerfectFresh Pro zone compartments is even colder.

A temperature setting of 4 °C combined with appropriate hygiene measures delays the propagation of bacteria, e.g. salmonella and listeria, which can lead to serious food poisoning.

Therefore, you should use these areas in the fridge zone and in the PerfectFresh Pro zone to store all delicate and highly perishable food, including:

- Fish, meat, poultry
- Cold cuts, ready meals
- Dishes or baked goods containing eggs or cream
- Fresh dough, cake mixtures, pizza or quiche dough
- Raw milk cheese and other raw milk products
- Hummus, vegetable spreads, plant-based cream cheese substitutes
- Pre-packed vegetables
- Other fresh food (with a label stating it should be kept at a temperature of approx. 4 °C)

Should food be stored loose or in packaging?

Ensure that food stored in the fridge zone is in packaging or covered properly (some exceptions apply in the PerfectFresh Pro zone).
This will prevent food odours from affecting other food, stop food from drying out and also prevent any cross-contamination of germs. This is particularly important when storing meat products. Make sure that food such as raw meat and fish in particular does not come into contact with other food.

By ensuring that the temperature settings are correct and by taking appropriate hygiene measures, you can prolong the storage life of your food considerably. This prevents food waste.

Storing food in the PerfectFresh Pro zone

The PerfectFresh Pro zone satisfies the requirements of a chill compartment to DIN EN 62552:2025.

The PerfectFresh Pro zone provides ideal storage conditions for fruit, vegetables, fish, meat and dairy products. Food stays fresh considerably longer while retaining both flavour and vitamins.

Remember that the fresher the food when placed in the appliance, the longer it will stay fresh.

The **temperature** is controlled automatically and maintained at **0 to 3 °C**.
While lower than the temperature in a standard fridge zone, this is the optimum temperature range for storing fresh food which is not sensitive to cold. As the deterioration process is decelerated at this temperature, food can be stored considerably longer without loss of freshness.

Take food out approximately 30 to 60 minutes before using it. The aroma and taste do not fully develop until the food has reached room temperature.

The **humidity level** can also be regulated to suit the food being stored. Food retains its own moisture if stored at a higher humidity and so does not dry out as quickly.

Humidity-controlled compartment



The humidity level is increased depending on the position of the compartment cover: ◊ not increased or ◊◊◊ increased.

Increased humidity ◊◊◊

At this setting, the humidity-controlled compartment is suitable for storing fruit and vegetables.

The moisture level greatly depends on the type and quantity of food being stored, if stored unwrapped.

Increased humidity in the humidity-controlled compartment can cause a build-up of condensate.

If you find that too much condensate has formed and this is affecting the food, proceed as follows:

Wipe off any condensate with a cleaning cloth.

Open the compartment cover by moving it to the low humidity ◊ position.

Selecting increased humidity ◊◊◊

- Open the drawer of the humidity-controlled compartment.

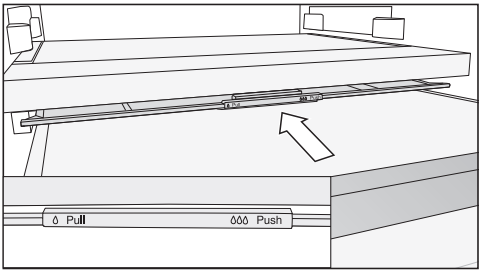

- Slide the compartment cover backwards as far as it will go.

The compartment cover is closed.

Humidity level not increased ◊

When the ◊ setting is used, the humidity-controlled compartment becomes a dry compartment (see “Dry compartment”).

Selecting low humidity ◊

- Open the drawer of the humidity-controlled compartment.

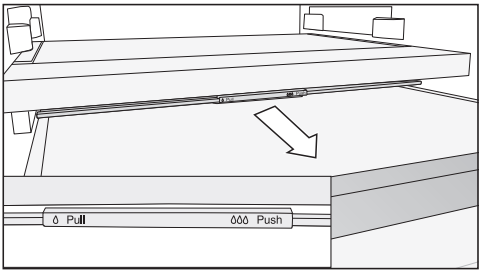

- Pull the compartment cover forwards as far as it will go.

The compartment cover is open and the humidity drops ◊.

If the food is higher than the edge of the drawer, pushing in the drawer may alter the position of the compartment cover, causing it to close.
When filling the drawer, take care to ensure that the food does not touch the compartment cover.

Dry compartment



The humidity is not increased .

The dry compartment is ideal for storing food which goes off quickly, such as:

- Fresh fish and shellfish
- Meat, poultry and sausage
- Deli salads
- Dairy products, such as milk, yoghurt, cheese, cream, etc.
- Plant-based products such as tofu, oat drinks, hummus, vegetable spreads, meat and cheese substitutes, etc.
- Any type of food can in fact be stored in this compartment, as long as it is packaged.

Please note that food rich in protein deteriorates faster than other types of food.
Shellfish, for example, deteriorates faster than fish, and fish deteriorates faster than meat.
For hygiene reasons, always keep these foods **covered or wrapped**.

Observe the following tips if you find that food you have stored does not keep well (e.g. food becomes limp or wilts after only being stored for a short time):

- Only place fresh food in the appliance. The initial condition of the food is crucial to maintaining freshness.
- Clean the PerfectFresh Pro zone compartments before storing food in them.
- Very wet food should be dried off before storing it.
- Do not store any food which is sensitive to cold in the PerfectFresh Pro zone.
- Select the correct PerfectFresh Pro compartment for the food as well as the correct position for the compartment cover (low humidity ◊ or increased humidity ◊◊◊).
- An increased humidity level ◊◊◊ in the humidity-controlled compartment is achieved with the moisture present in the food being stored if the food is stored unwrapped. The more food stored in the compartment, the higher the humidity.
- Do not overfill the compartments.
- If you find that too much condensate has formed when using the ◊◊◊ setting and this is affecting the food:

- Wipe off any condensate with a cloth.
- Place a rack or similar item in the compartment so that excess moisture can drain away.
- Open the compartment cover by moving it to the low humidity ◊ position.

- If the humidity level is too low despite the ◊◊◊ setting, wrap the food in airtight packaging.
- If you think that the temperature in the PerfectFresh Pro zone is too high or too low, try regulating it slightly first by changing the temperature in the fridge zone by 1 or 2 °C. If ice crystals start to form on the floor of the PerfectFresh Pro compartments, increase the temperature as otherwise the cold temperature will damage the food.
- If adjusting the temperature in the fridge zone does not remedy the problem, adjust the temperature in the PerfectFresh Pro zone (see “The correct temperature”).

Freezing and storing fresh food

Before placing food in the freezer

Only freeze fresh food which is in good condition.

- When freezing more than 2 kg of fresh food, switch on the SuperFreeze function ❄ for 6 hours before placing the food in the freezer.
- When freezing even larger amounts of food, switch on the SuperFreeze function ❄ for 24 hours before placing the food in the freezer.

This helps the frozen food which is already stored in the freezer to stay frozen.

Placing frozen food in the freezer

⚠ If the food is too heavy, this can cause damage.
Loading food which is too heavy can cause damage to the freezer drawers/glass shelves.
Do not exceed the relevant maximum load:
Freezer drawer = 12 kg
Glass shelf = 35 kg

Unfrozen food should not touch frozen food as this will cause the frozen food to begin to thaw.

- To prevent food sticking together when frozen, make sure that the packaging and containers are dry.

To ensure that food freezes through to the core quickly, do not exceed the following packaging and container sizes:

- Fruit and vegetables: max. 1 kg
- Meat: max. 2.5 kg

– Freezing small amounts of food

Divide the food between all the freezer drawers.

- Always place the food as far back as possible in the freezer drawer so that it freezes through to the core as quickly as possible.

– Freezing the maximum amount of food (see data plate)

Divide the food between all the freezer drawers.

- Always place the food as far back as possible in the freezer drawer so that it freezes through to the core as quickly as possible.

Cooling drinks quickly

- When cooling drinks quickly in the freezer zone, make sure bottles are not left in for **more than 1 hour**. Otherwise they could burst.

Making ice cubes

- Fill the ice cube tray 3/4 full with water and place it on the bottom of one of the freezer drawers.
- Once frozen, use a blunt instrument, for example a spoon handle, to remove the ice cube tray from the freezer if it is stuck.

Tip: Ice cubes can be removed easily from the tray by twisting the tray gently or by holding it under cold running water for a short time.

Adjusting settings

	Settings mode
	Switch Party mode on or off.
	Switch Holiday mode on or off.
/	Switch the locking function on, deactivate it temporarily or switch it off completely.
	Switch off the refrigeration appliance.
	Switch Sabbath mode on or off.
	Call up the Sabbath mode version.
	Change the time before the door alarm is triggered.
	Adjusting the temperature level in the PerfectFresh Pro zone
	Networking
	APP / WPS Set up networking for the first time.
	/ Activate or deactivate the WiFi connection.
	Reset the network configuration.
/	Switch the keypad tone on or off.
/	Change the volume of the alarms and buzzers or switch off the alarms and buzzers completely.
	Adjust the display brightness.
°C / °F	Change the temperature unit.
	Switch the demo mode off (only visible when switched on).
	Reset the settings to their factory default settings.
	Access information about your refrigeration appliance.
	Activate the Active AirClean filter display.

 Switch cleaning mode on or off.

The door alarm and other warnings are automatically disabled when the appliance is in Settings mode ⚙.

Switching Party mode 🍸 on

The Party mode function 🍸 should be switched on around 4 hours before placing food in the freezer.

- Tap *OK*.

🌡 will appear in the display.

- Use the < or > sensor control to scroll to the ⚙ symbol.
- Tap *OK*.
- Use the < or > sensor control to scroll to the 🍸 symbol.
- Tap *OK*.

When Party mode 🍸 is switched on, a dot appears in the upper corner of the display •.

- **To leave Settings mode** ⚙, use the < or > sensor control to scroll to the ⮌ symbol.
- Tap *OK*.
- Use the < or > sensor control to scroll to the ⮌ symbol and tap *OK*.

When Party mode 🍸 is switched on, the SuperCool ❄ function is switched on automatically.

Switching Party mode 🍸 off

The Party mode function 🍸 will switch itself off automatically after approx. 24 hours.

To save energy, you can switch off the Party mode function early yourself once food and drinks are sufficiently chilled.

- Tap *OK*.

🌡 will appear in the display.

- Use the < or > sensor control to scroll to the ⚙ symbol.
- Tap *OK*.
- Use the < or > sensor control to scroll to the 🍸 symbol.
- Tap *OK*.

When the Party mode function 🍸 is switched off, the dot in the upper corner of the display goes out.

- **To leave Settings mode** ⚙, use the < or > sensor control to scroll to the ⮌ symbol.
- Tap *OK*.
- Use the < or > sensor control to scroll to the ⮌ symbol and tap *OK*.

Switching on Holiday mode

- Tap *OK*.

will appear in the display.

- Use the < or > sensor control to scroll to the ⚙ symbol.
- Tap *OK*.
- Use the < or > sensor control to scroll to the symbol.
- Tap *OK*.

When Holiday mode is switched on, a dot appears in the upper corner of the display •.

- **To leave Settings mode** ⚙, use the < or > sensor control to scroll to the ⮌ symbol.
- Tap *OK*.
- Use the < or > sensor control to scroll to the ⮌ symbol and tap *OK*.

⚠ Health risk caused by decomposing food.
The usability and quality of food in the fridge zone may deteriorate if the temperature remains above 4 °C for an extended period.
Only ever switch on the Holiday mode function for a limited period.
Do not store any temperature-sensitive food which goes off easily, such as fruit, vegetables, fish, meat and dairy products, during this time.

Switching Holiday mode off

- Tap *OK*.

will appear in the display.

- Use the < or > sensor control to scroll to the ⚙ symbol.
- Tap *OK*.
- Use the < or > sensor control to scroll to the symbol.
- Tap *OK*.

When the Holiday mode function is switched off, the dot in the upper corner of the display goes out.

- **To leave Settings mode** ⚙, use the < or > sensor control to scroll to the ⮌ symbol.
- Tap *OK*.
- Use the < or > sensor control to scroll to the ⮌ symbol and tap *OK*.

Switching the lock function 🔒/🔓 on

- Tap *OK*.

🌡 will appear in the display.

- Use the < or > sensor control to scroll to the ⚙ symbol.
- Tap *OK*.
- Use the < or > sensor control to scroll to the 🔓 symbol.
- Tap *OK*.

When the lock function 🔒 is switched on, a dot appears in the upper corner of the display •.

- Open and close the appliance door. The lock function 🔒 is only activated now.
- **To leave Settings mode** ⚙, use the < or > sensor control to scroll to the ⮌ symbol.
- Tap *OK*.
- Use the < or > sensor control to scroll to the ⮌ symbol and tap *OK*.

Deactivating the lock function 🔒/🔓 temporarily

- Tap *OK*.

🔒 will appear in the display.

- Touch the *OK* sensor control for approx. 6 seconds.

🌡 will appear in the display.

- Tap *OK*.
- Now select the required settings.
- Tap *OK*.

Closing the appliance door will reactivate the lock function 🔒.

Switching the lock function 🔒/🔓 off completely

- Tap *OK*.

🔒 will appear in the display.

- Touch the *OK* sensor control for approx. 6 seconds.

🌡 will appear in the display.

- Use the < or > sensor control to scroll to the ⚙ symbol.
- Tap *OK*.
- Use the < or > sensor control to scroll to the 🔒 symbol.
- Tap *OK*.

When the lock function is switched off, 🔓 appears in the display.

- **To leave Settings mode** ⚙, use the < or > sensor control to scroll to the ⮌ symbol.
- Tap *OK*.
- Use the < or > sensor control to scroll to the ⮌ symbol and tap *OK*.

Switching the refrigeration appliance off

- Touch the *OK* sensor control on the control panel.

will appear in the display (fridge zone is selected).

- Use the < or > sensor control to scroll to the ⚙ symbol.
- Tap *OK*.
- Use the < or > sensor control to scroll to the ⏻ symbol.
- Tap *OK*.

The cooling system and the interior lighting are switched off.

⏻ will appear in the display.

Please note: The refrigeration appliance is not disconnected from the mains power supply when it is switched off.

Switching Sabbath mode 🕎 on

- Tap *OK*.

🌡 will appear in the display.

- Use the < or > sensor control to scroll to the ⚙ symbol.
- Tap *OK*.
- Use the < or > sensor control to scroll to the 🕎 symbol.
- Tap *OK*.

When the Sabbath mode function 🕎 is switched on, a dot appears in the upper corner of the display •.

The display switches off after approx. 3 seconds.

Ensure that the appliance door is properly closed, as visual and audible alarms are switched off.

Switching Sabbath mode 🕎 off

The Sabbath mode function 🕎 will switch off automatically after approx. 80 hours.

However, you can switch the Sabbath mode function 🕎 off early.

- Tap *OK*.

🕎 will appear in the display.

- Tap *OK*.

When the Sabbath mode function 🕎 is switched on, a dot appears in the upper corner of the display •.

- Tap *OK*.

When the Sabbath mode function 🕎 is switched off, the dot in the upper corner of the display goes out.

- **To leave Settings mode** ⚙, use the < or > sensor control to scroll to the ⮌ symbol.
- Tap *OK*.
- Use the < or > sensor control to scroll to the ⮌ symbol and tap *OK*.

Changing the time before the door alarm is triggered

- Tap *OK*.

will appear in the display.

- Use the < or > sensor control to scroll to the ⚙ symbol.
- Tap *OK*.
- Use the < or > sensor control to scroll to the symbol.
- Tap *OK*.
- Use the < and > sensor controls to set the time you want between 30 seconds and 3 minutes: 30 seconds.
- Tap *OK*.
- **To leave Settings mode** ⚙, use the < or > sensor control to scroll to the ⮌ symbol.
- Tap *OK*.
- Use the < or > sensor control to scroll to the ⮌ symbol and tap *OK*.

Setting up networking for the first time

- Tap *OK*.

will appear in the display.

- Use the < or > sensor control to scroll to the ⚙ symbol.
- Tap *OK*.
- Use the < or > sensor control to scroll to the ⓐ symbol.
- Tap *OK*.
- Use the < and > sensor controls to select the connection method you wish to use (app or WPS).
- Tap *OK*.
- **To leave Settings mode** ⚙, use the < or > sensor control to scroll to the ⮌ symbol.
- Tap *OK*.
- Use the < or > sensor control to scroll to the ⮌ symbol and tap *OK*.

After you have successfully logged in, will appear in the display.

If a connection could not be created, ⊗ will appear.

Start the process again.

Deactivating the WiFi connection

- Tap *OK*.

will appear in the display.

- Use the < or > sensor control to scroll to the ⚙ symbol.
- Tap *OK*.
- Use the < or > sensor control to scroll to the ⓐ symbol.
- Tap *OK*.

If the WiFi is deactivated, the symbol will appear in the display.

- **To leave Settings mode** ⚙, use the < or > sensor control to scroll to the ⮌ symbol.
- Tap *OK*.
- Use the < or > sensor control to scroll to the ⮌ symbol and tap *OK*.

Activating the WiFi connection

- Tap *OK*.

🌡 will appear in the display.

- Use the < or > sensor control to scroll to the ⚙ symbol.
- Tap *OK*.
- Use the < or > sensor control to scroll to the @ symbol.
- Tap *OK*.
- Use the < or > sensor control to scroll to the ⮌ symbol and tap *OK*.

If the WiFi is activated, the ᯤ symbol and a dot appear in the upper corner of the display •.

- **To leave Settings mode** ⚙, use the < or > sensor control to scroll to the ⮌ symbol.
- Tap *OK*.
- Use the < or > sensor control to scroll to the ⮌ symbol and tap *OK*.

When the WiFi connection is active, the ᯤ symbol appears in the display.

Resetting the network configuration

- Tap *OK*.

🌡 will appear in the display.

- Use the < or > sensor control to scroll to the ⚙ symbol.
- Tap *OK*.
- Use the < or > sensor control to scroll to the @ symbol.
- Tap *OK*.
- Use the > sensor control to scroll to the ⟲ symbol.
- Tap *OK*.
- Use the > sensor control to scroll to the × symbol.
- Tap *OK*.
- **To leave Settings mode** ⚙, use the < or > sensor control to scroll to the ⮌ symbol.
- Tap *OK*.
- Use the < or > sensor control to scroll to the ⮌ symbol and tap *OK*.

All entered settings and values for Miele@home are reset to the default settings.

The WiFi connection has been deactivated. ᯤ will go out on the display.

The network configuration should be reset whenever a wine unit is being disposed of or sold, or if a used wine unit is being put into operation. All personal data is removed from the wine unit. This will also ensure that a previous owner is no longer able to access the wine unit.

Adjusting the temperature level in the PerfectFresh Pro zone

- In Settings mode ⚙, use the < or > sensor control to scroll to the 🌡↕ symbol.
- Tap *OK*.
- Use the < and > sensor controls to select a setting between 1 (lowest temperature) and 9 (highest temperature).
- Tap *OK*.

The factory default setting for the temperature level is 5.
Under certain circumstances, a setting from 1 to 4 can cause the temperature to fall below 0 °C. This can cause food to freeze.
Check the temperature setting.

Switching on the keypad tone 🔊

- Tap *OK*.

🌡 will appear in the display.

- Use the < or > sensor control to scroll to the ⚙ symbol.
- Tap *OK*.
- Use the < or > sensor control to scroll to the 🔇 symbol.
- Tap *OK*.

If the keypad tone is switched on, 🔊 will appear. A dot also appears in the upper corner of the display •.

- **To leave Settings mode** ⚙, use the < or > sensor control to scroll to the ⮌ symbol.
- Tap *OK*.
- Use the < or > sensor control to scroll to the ⮌ symbol and tap *OK*.

Switching off the keypad tone 🔇

- Tap *OK*.

🌡 will appear in the display.

- Use the < or > sensor control to scroll to the ⚙ symbol.
- Tap *OK*.
- Use the < or > sensor control to scroll to the 🔊 symbol.
- Tap *OK*.

If the keypad tone is switched off, 🔇 will appear.

- **To leave Settings mode** ⚙, use the < or > sensor control to scroll to the ⮌ symbol.
- Tap *OK*.
- Use the < or > sensor control to scroll to the ⮌ symbol and tap *OK*.

Changing the volume of the alarms and buzzers 🔊/🔇

- Tap *OK*.

🌡 will appear in the display.

- Use the < or > sensor control to scroll to the ⚙ symbol.
- Tap *OK*.
- Use the < or > sensor control to scroll to the 🔊 symbol.
- Tap *OK*.
- Use the < and > sensor controls to select the volume you want for alarms and buzzers.
- If you want to switch the alarms and buzzers off completely, scroll to the left until the segment bar goes out completely.
- Tap *OK*.

When the alarms and buzzers are switched off, 🔇 will appear.

- **To leave Settings mode** ⚙, use the < or > sensor control to scroll to the ⮌ symbol.
- Tap *OK*.
- Use the < or > sensor control to scroll to the ⮌ symbol and tap *OK*.

Adjusting the display brightness ☼

- Tap *OK*.

🌡 will appear in the display.

- Use the < or > sensor control to scroll to the ⚙ symbol.
- Tap *OK*.
- Use the < or > sensor control to scroll to the ☼ symbol.
- Tap *OK*.
- Use the < and > sensor controls to select the display brightness you want.
- Tap *OK*.
- **To leave Settings mode** ⚙, use the < or > sensor control to scroll to the ⮌ symbol.
- Tap *OK*.
- Use the < or > sensor control to scroll to the ⮌ symbol and tap *OK*.

Changing the temperature unit °C/°F

- Tap *OK*.

🌡 will appear in the display.

- Use the < or > sensor control to scroll to the ⚙ symbol.
- Tap *OK*.
- Use the < or > sensor control to scroll to the °C or °F symbol.
- Tap *OK*.

The temperature unit °C or °F is now selected.

- **To leave Settings mode** ⚙, use the < or > sensor control to scroll to the ⮌ symbol.
- Tap *OK*.
- Use the < or > sensor control to scroll to the ⮌ symbol and tap *OK*.

Switching off demo mode

- Tap *OK*.

Miele will then appear on the appliance display, followed by the temperature display.

- Tap *OK*.
- Use the < or > sensor control to scroll to the symbol.
- Tap *OK*.

After demo mode has been switched off, the wine unit shuts down and must be switched on again.

Resetting the settings to their factory defaults

- Tap *OK*.

will appear in the display.

- Use the < or > sensor control to scroll to the ⚙ symbol.
- Tap *OK*.
- Use the < or > sensor control to scroll to the symbol.
- Tap *OK*.
- Use the > sensor control to scroll to the symbol.
- Tap *OK*.

The refrigeration appliance shuts down and must be switched on again.

Activating the Active AirClean filter display

- Tap *OK*.

will appear in the display.

- Use the < or > sensor control to scroll to the ⚙ symbol.
- Tap *OK*.
- Use the < or > sensor control to scroll to the symbol.
- Tap *OK*.

When the Active AirClean filter display is activated, a dot appears in the upper corner of the display •.

- **To leave Settings mode** ⚙, use the < or > sensor control to scroll to the ⮌ symbol.
- Tap *OK*.
- Use the < or > sensor control to scroll to the ⮌ symbol and tap *OK*.

Switching the Cleaning mode on

- Tap *OK*.

will appear in the display.

- Use the < or > sensor control to scroll to the ⚙ symbol.
- Tap *OK*.
- Use the < or > sensor control to scroll to the symbol.
- Tap *OK*.

When Cleaning mode is switched on, a dot appears in the upper corner of the display •.

- **To leave Settings mode** ⚙, use the < or > sensor control to scroll to the ⮌ symbol.
- Tap *OK*.
- Use the < or > sensor control to scroll to the ⮌ symbol and tap *OK*.

Switching the Cleaning mode off

- Tap *OK*.

will appear in the display.

- Use the < or > sensor control to scroll to the ⚙ symbol.
- Tap *OK*.
- Use the < or > sensor control to scroll to the symbol.
- Tap *OK*.

When Cleaning mode is switched off, the dot in the upper corner of the display disappears.

- **To leave Settings mode** ⚙, use the < or > sensor control to scroll to the ⮌ symbol.
- Tap *OK*.
- Use the < or > sensor control to scroll to the ⮌ symbol and tap *OK*.

The data plate located inside the interior cabinet of the refrigeration appliance must not be removed. It contains information which is required in the event of a service call.

Do not let water get into the electronic unit or the lighting.

⚠ Risk of damage due to moisture ingress.
The steam from a steam cleaner can damage plastic and electrical components.
Do not use a steam cleaner to clean the refrigeration appliance.

Cleaning water must not get into the drain hole.

Defrosting

Fridge zone and PerfectFresh Pro zone

The fridge zone and the PerfectFresh Pro zone defrost automatically.

Freezer zone

The freezer zone does not defrost automatically.

Ice and frost will form in the freezer zone, e.g. on the internal walls. How much ice and frost accumulates in the appliance will depend on the following:

- Whether the freezer door has been opened frequently and/or left open for a while
- Whether a large quantity of food has been placed in the freezer at once
- Whether the humidity in the room has increased

A thick layer of ice makes it difficult to open the freezer drawers and can prevent the freezer zone door from closing properly.

Cleaning agents

Cleaning and conditioning agents used in the interior cabinet of the refrigeration appliance must be food safe.

To avoid damaging the surfaces of the appliance, **do not use the following:**

- Cleaning agents containing soda, ammonia, acids or chlorides
- Cleaning agents containing descaling agents
- Abrasive cleaning agents (e.g. scouring powder, scouring liquid or pumice stones)
- Cleaning agents containing solvents
- Stainless steel cleaners
- Dishwasher cleaner
- Oven sprays
- Glass cleaning agents
- Hard, abrasive sponges and brushes (e.g. pot scourers)
- Eraser stain remover blocks
- Sharp metal scrapers

We recommend using a clean sponge and lukewarm water with a little washing-up liquid to clean the surfaces of the appliance.

Preparing the refrigeration appliance for cleaning

Cleaning the fridge zone only:

Use the Cleaning mode (see “Settings mode” and “Adjusting settings”).

- Take any food out of the fridge zone and store it in a cool place.
- Take out any removable accessories for cleaning (see “Removing and dismantling accessories for cleaning”).

Cleaning the freezer zone/the entire refrigeration appliance:

⚠ Risk of damage from an incorrect defrosting process.
When defrosting the freezer, make sure that you do not damage the evaporator as this would cause irreversible damage to the refrigeration appliance.
Do not scrape off ice and frost. Do not use sharp objects.
Do not use any mechanical tools or other types of aid which are not recommended by the manufacturer to accelerate the defrosting process.

⚠ Risk of damage due to heat and moisture ingress.
The steam from a steam cleaner as well as electric heaters and candles can damage plastic and electrical components.
Do not use a steam cleaner, electric heaters or candles to defrost the refrigeration appliance.

⚠ Risk of damage and risk to health caused by defrosting sprays or de-icers.
Defrosting sprays or de-icers can contain substances which could damage the plastic parts or which might cause a build-up of explosive gases and pose a danger to health.
Never use defrosting sprays or de-icers to defrost the refrigeration appliance.

- Switch on the SuperFreeze function ❄ 1 day before defrosting. The frozen food retains the cold reserve for longer when taken out of the freezer.
- Switch the refrigeration appliance off.

⏻ appears in the display and the cooling system is switched off.

- Take any food out of the freezer zone/refrigeration appliance and store it in a cool place.
- Remove the ice packs and place them on the food to be frozen.
- Take out any removable accessories for cleaning (see “Removing and dismantling accessories for cleaning”).
- Leave the freezer door open.
- Remove any loose pieces of ice.
- Use a sponge or cleaning cloth to soak up the defrosted water as often as necessary.

Cleaning the interior of the appliance

Clean the refrigeration appliance regularly, at least once a month, and the freezer section each time it is defrosted.

If soiling is left on for any length of time, it may become impossible to remove under certain circumstances.
Surfaces may suffer discolouration or damage.
It is therefore best to remove any soiling immediately.

- Clean the **interior** with a clean sponge cloth, lukewarm water and a little washing-up liquid.
- Clean the freezer zone every time it is defrosted.
- After cleaning, wipe with clean water and dry with a cloth.

Keep the condensate channel and the condensate drain hole clean. Condensate must be able to drain away unhindered at all times.

- Clean the condensate channel and drain hole more frequently using a cotton swab or similar item.
- Leave the door open to air the refrigeration appliance sufficiently for a short while and to prevent odour build-up.

Cleaning accessories by hand or in the dishwasher

The following components must be cleaned **by hand** only:

- The stainless steel trim
- Adapters for the split shelf
- shelf with printing
- Flexible bottle rack
- The dividing plate and bottle rack
- All drawers and compartment lids (these vary depending on model)
- The plastic parts of the adjustable shelf with pivotable glass shelf (available as optional accessory)
- The ice packs
- Organisation box (available as an optional accessory)

The following components are **dishwasher-safe**:

⚠ Risk of damage due to high dishwasher temperatures.
Parts of the refrigeration appliance may become unusable, e.g. deform, if they are washed in the dishwasher at more than 55 °C.
For dishwasher-safe components, always select dishwasher programmes with a maximum temperature of 55 °C.

Contact with natural dyes from carrots, tomatoes and ketchup, etc., may discolour the plastic parts in the dishwasher. This discolouration does not affect the stability of the parts.

- The bottle holder, egg tray, ice cube tray
- The door and bottle shelves in the appliance door (without stainless steel trim)
- Adjustable shelves (without the trim or printing)
- The glass shelves (without protective trims)
- The holder for the charcoal filter (available as an optional accessory)

Removing and dismantling accessories for cleaning

Dismantling the door shelf/bottle shelf

Remove the stainless steel trim before cleaning the door shelf/bottle shelf in the dishwasher.

To remove the stainless steel trim, proceed as follows:

- Place the door shelf/bottle shelf on the worktop.
- Pull the trim off the shelf beginning at one side.
- After cleaning the door shelf/bottle shelf, reattach the trim.

Dismantling an adjustable shelf

Remove the trim before cleaning the adjustable shelf. Proceed as follows:

- Place the shelf on a worktop covered with a soft material (e.g. a tea towel).

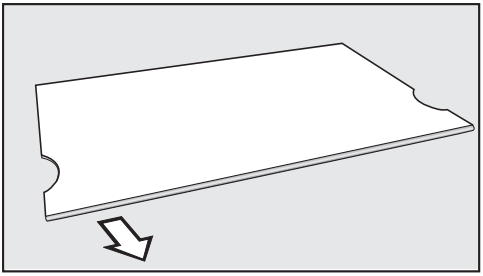

- Pull the trim off the shelf beginning at one side.
- After cleaning the shelf, reattach the trim.

Dismantling a split shelf

Remove the trim before cleaning the adjustable shelf. Proceed as follows:

- Place the shelf on a worktop covered with a soft material (e.g. a tea towel).
- Pull the trim off the shelf, beginning at one side.
- Pull the two adapters off the support ribs on the left and right.
- After cleaning, attach the two adapters to the support ribs on the left and right at the desired height.
- Reattach the trim to the shelf.

Removing the drawers from the fridge zone

- Pull the drawer halfway out.

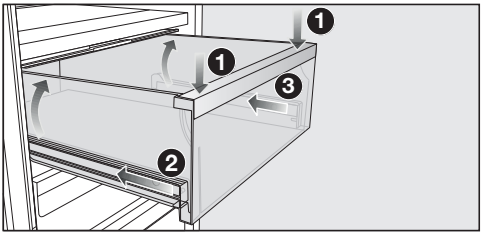

- Push the drawer down ❶ at the front until it lifts up at the back. Keep pushing the drawer down.
- Now carefully insert the left ❷ and then the right ❸ rail by approx. 2 cm.

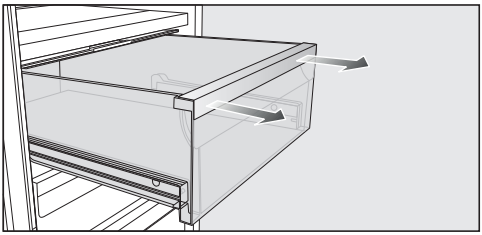

- Using both hands, pull the drawer firmly forwards.

Push the telescopic rails back in again to avoid damaging them.

Fitting the drawers

- Place the drawer on the fully retracted telescopic runners.
- Push the drawer into the refrigeration appliance until it clicks into position.

Removing the dividing plate and bottle rack

- Remove the glass shelf at the back of the dividing plate.

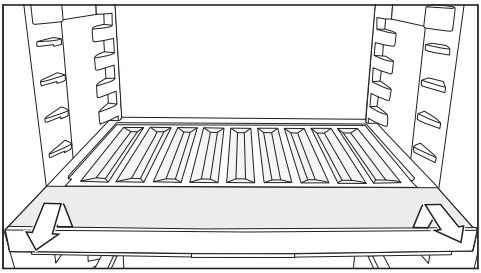

- Lift the bottle rack at the front and pull it out.
- After cleaning, slide the bottle rack all the way in and push it down.
- Place the glass shelf back on the dividing plate.

Removing the compartment cover

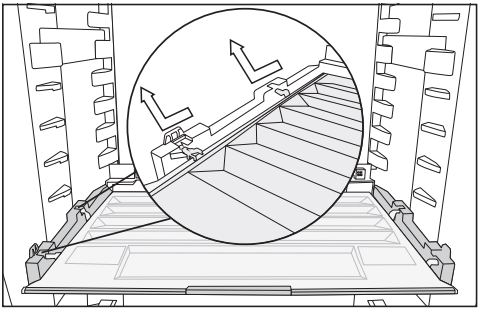

- Lift the cover at the front and pull it out.
- After cleaning, slide the compartment cover back in again.

Removing the drawers and glass shelves from the freezer section

- Pull the drawer forwards a little and out.
- Pull the glass shelf forwards a little and out.

Inserting the glass shelves and drawers into the freezer section

- Place the glass shelf on the guide rails at an angle.
- Push in and lower the glass shelf.
- Place the drawer on the guide rails at an angle.
- Push in and lower the drawer.

Replacing the Active AirClean filter (charcoal filter)

New Active AirClean filters can be obtained from the Miele Customer Service Department, your Miele dealer or the Miele website.

- Pull the charcoal filter holder upwards to remove it from the adjustable shelf.

When in position, the charcoal filters must not touch the rear wall of the refrigeration appliance as the moisture could cause them to stick to it.

Insert the new charcoal filters deep enough in the holder to ensure that they do not protrude over the edge of the holder.

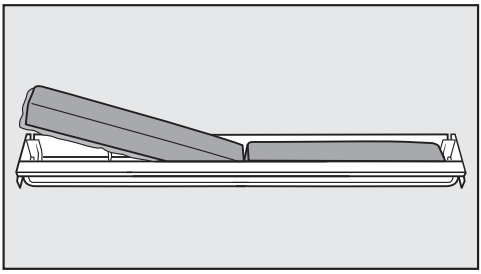

- Remove both charcoal filters and place the new filters with the surrounding edge pointing downwards in the holder.

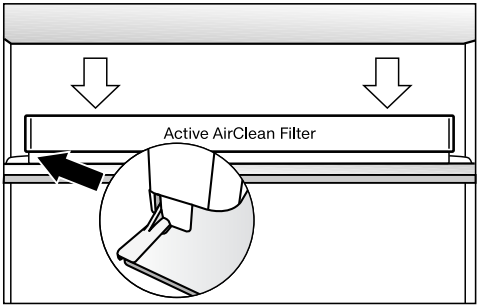

- Place the holder in the middle of the protective strip at the back of any adjustable shelf so that it clicks into position.

Confirming that the Active AirClean filter has been changed

- Tap *OK*.

The ⊛ symbol will go out and the counter will be reset.

Cleaning the door seal

⚠ Risk of damage as a result of incorrect cleaning.
If you treat the door seal with oils or grease, it can become porous.
Do not use any oils or grease on the door seal.

- The door seal should be cleaned regularly with clean water, and then wiped dry with a soft cloth.

Cleaning the ventilation openings

- The ventilation openings should be cleaned on a regular basis with a feather duster or vacuum cleaner (you could use a Miele vacuum cleaner dusting brush, for example).

After cleaning

- Replace all shelves and accessories in the refrigeration appliance.
- Switch the refrigeration appliance back on, if necessary.
- If necessary, switch the Cleaning mode off again from the fridge zone.
- Switch the SuperFreeze function ❄ on for a while so that the freezer zone can cool down quickly.
- Switch on the SuperCool function ❄ for a while so that the fridge zone can cool down quickly.
- Place food in the fridge zone.
- Once the freezer zone has reached the required temperature, place the glass plates and freezer drawers back in the freezer zone together with the frozen food.
- Replace the ice packs in the refrigeration appliance.
- Switch the SuperFreeze function ❄ off as soon as the temperature in the freezer is a constant -18 °C or colder.
- Close the appliance doors.

Troubleshooting

Many malfunctions and faults can be easily remedied. You can save time and money in many cases, as you do not need to contact Customer Service.

More information to help you remedy faults yourself can be found at www.miele.co.uk/support/customer-assistance.

To prevent unnecessary loss of temperature it is advisable not to open the door while waiting for the appliance to be serviced.

Other problems

Problem	Cause and remedy
The refrigeration appliance is not cooling.	The refrigeration appliance has not been switched on. ■ Switch the refrigeration appliance on.
	The mains plug is not inserted in the socket correctly or the plug connector is not inserted into the socket at the back of the appliance correctly. ■ Insert the mains plug into the mains socket and the plug connector into the appliance socket correctly and switch on.
	The mains fuse has tripped. There could be a fault with the refrigeration appliance, the household electrical wiring or another electrical appliance. ■ Contact a qualified electrician or the Miele Customer Service Department.
The compressor runs continuously.	This is not a fault. To save energy, the compressor runs at a lower speed when less cooling is required. This increases the compressor running time.
The compressor is switching on more frequently and for longer periods of time. The temperature in the refrigeration appliance is too low.	The appliance doors have been opened too frequently. Or large amounts of fresh food have been placed in the appliance. ■ Only open the appliance doors when necessary and for as short a time as possible.
	The appliance doors are not closing fully. The temperature in the refrigeration appliance is dropping.

Problem	Cause and remedy
	■ Check that the appliance doors are seated correctly and use the screws in the hinges to adjust them if necessary.
	The appliance doors are not closed properly. If a thick layer of ice has already formed, this will affect cooling and increase energy consumption. ■ Always close the appliance doors fully. ■ Defrost the refrigeration appliance if necessary and clean it.
	The ambient temperature is too high. The higher the ambient temperature, the longer the compressor runs. ■ See the information in “Installation – Installation site”.
	The ventilation openings are covered or dusty. ■ Do not block the ventilation openings. ■ Dust the ventilation openings regularly.
	Built-in appliances: the refrigeration appliance was not properly installed in the niche. ■ Install the refrigeration appliance in the niche as described in the installation instructions.
The temperature in the refrigeration appliance is too low.	The temperature setting in the refrigeration appliance is too low. ■ Correct the temperature setting.
	A large amount of food has been frozen at once. ■ Refer to the instructions in “Operation – Freezing and storing fresh food”.
	The SuperCool function ❄ is still switched on. ■ Switch off the SuperCool function ❄ earlier to save energy.
	The SuperFreeze function ❄ is still switched on. ■ Switch off the SuperFreeze function ❄ earlier to save energy.

Troubleshooting

Problem	Cause and remedy
The temperature in the refrigeration appliance is too high. The frozen food (depending on the model) could defrost.	This is not a fault. The temperature setting is too high. ■ Correct the temperature setting. ■ Check the temperature again after 24 hours.
	The ambient temperature is too low for this refrigeration appliance. If the ambient temperature is too low, the compressor will run less frequently. The temperature in the refrigeration appliance is rising. ■ See the information in “Installation – Installation site”. ■ Increase the ambient temperature.
Ice or condensation has built up inside the refrigeration appliance. The appliance door may not close correctly.	The door seal has come out of its groove. ■ Check that the door seal is correctly positioned in the groove.
	The door seal is damaged. ■ Check whether the door seal is damaged.
The door seal is damaged or needs to be replaced.	No tools are required to change the door seal. ■ Change the door seal. A replacement is available from Miele or from specialist retailers.
The food is affected by the ◊◊◊ setting in the humidity-controlled compartment.	There is too much condensate in the humidity-controlled compartment. ■ Wipe off any condensate with a cloth. ■ Place a rack or similar item in the compartment so that excess moisture can drain away. ■ Open the compartment cover by moving it to the “low humidity ◊” position. ■ Switch off the humidifier (depending on the model).
Food has frozen together.	The food packaging was not dry when placed in the freezer. ■ Use a blunt instrument, e.g. a spoon handle or plastic scraper, to prise it apart carefully.

Problem	Cause and remedy
There is no audible alarm even though the door has been open for a long time.	This is not a fault. The alarm has been switched off in Settings mode. If you want to switch the audible alarm back on again: ■ Tap *OK*. 🌡 will appear in the display. ■ Use the < or > sensor control to scroll to the ⚙ symbol. ■ Tap *OK*. ■ Use the < or > sensor control to scroll to the 🔊 symbol. ■ Tap *OK*. ■ Use the < and > sensor controls to select the volume you want for alarms and buzzers. ■ Tap *OK*. When the alarms and buzzers are switched on, 🔊 will appear.

Display warnings

Message	Cause and remedy
▮ lights up on the display, the refrigeration appliance does not get cold even though the controls and the interior lighting are working.	Demo mode has been activated. ■ Touch *OK*. Miele will appear initially in the display, followed by the start screen. ■ Touch *OK*. ■ In Settings mode ⚙, use the < or > sensor control to scroll to the ▮ symbol. ■ Touch *OK*. After demo mode ▮ has been switched off, the refrigeration appliance switches off and must be switched on again.

Message	Cause and remedy
is lit up on the display and the refrigeration appliance cannot be used.	The Cleaning mode function is still switched on. ■ Touch the *OK* sensor control on the control panel to switch off Cleaning mode. will appear in the display. ■ Touch *OK*. When Cleaning mode is switched off, the dot in the upper corner of the display goes out. ■ Use the < or > sensor control to scroll to the ⮌ symbol and touch *OK*. The refrigeration appliance will start cooling again.
Nothing is visible on the display. The display is completely blank.	Sabbath mode is switched on: the interior lighting is switched off and the refrigeration appliance is cooling. ■ Tap *OK*. will appear on the display. ■ Tap *OK*. When the Sabbath mode function is switched on, a dot appears in the upper corner of the display •. ■ Tap *OK*. When the Sabbath mode function is switched off, the dot in the upper corner of the display disappears. **Energy-saving mode** is switched on: if you do not interact with the display for a certain period of time, it switches to energy-saving mode and goes dark.
The symbol is lit up on the display and the refrigeration appliance cannot be used.	The lock function has been activated. ■ Unlock the refrigeration appliance temporarily or switch the lock function off completely.
The symbol lights up in the start display and a buzzer sounds.	The charcoal filter replacement indicator in the start display reminds you to replace the charcoal filter. ■ Replace the charcoal filter in the holder (see "Cleaning and care – Replacing the charcoal filters (optional accessory)") and confirm that the charcoal filter has been replaced by touching the *OK* sensor control. The symbol will go out on the start display.

Message	Cause and remedy
lights up in one of the temperature displays, an alarm sounds and the interior lighting is pulsating.	The **door alarm** has been activated. ■ Tap *OK*. The alarm will stop, the symbol will go out and the interior lighting will light up again constantly. ■ Close the relevant appliance door.
lights up in the freezer zone temperature display and an alarm also sounds.	The **temperature alarm** has been activated; the temperature in the freezer zone has risen higher or fallen lower than the temperature set. Possible reasons for this include: – The appliance door has been opened frequently. – A large quantity of fresh food has been placed in the freezer without switching on the Super-Freeze function. – A prolonged power cut has occurred. – The refrigeration appliance has a fault. ■ Tap *OK*. The alarm message is confirmed: goes out and the alarm stops. The warmest temperature recorded in the freezer zone will flash for about 1 minute in the display. Then the temperature display will change to the current temperature in the freezer zone. You can exit from the flashing temperature display early: ■ Tap *OK*. The warmest temperature display will disappear. The display will then revert to showing the current temperature in the freezer zone. ■ Remedy the cause of the alarm. ■ Depending on the temperature displayed, you should check whether food in the freezer has started to thaw or has defrosted. If it has, it should be used as soon as possible. Defrosted food may only be refrozen after it has been cooked.

Message	Cause and remedy
⚠ lights up in the display and an alarm also sounds.	Indication of a power cut: the temperature in the freezer zone over the last few days or hours has risen too high because of a power cut or interruption to the power supply. ■ Remove the ice packs located in the top of the freezer zone. ■ Place the ice packs directly on top of the frozen food in the front of the top drawer. ■ Tap *OK*. The fault message is confirmed: ⚠ goes out and the alarm will stop. The warmest temperature recorded in the freezer zone will flash for about 1 minute in the temperature display for the freezer zone. Then the temperature display will change to the current temperature in the freezer zone. You can exit from the flashing temperature display early: ■ Tap *OK*. The warmest temperature display will disappear. The display will then revert to showing the current temperature in the freezer zone. The refrigeration appliance will go back to the last temperature setting when the power is back on. ■ Remedy the cause of the alarm. ■ Depending on the temperature displayed, you should check whether food in the freezer has started to thaw or has defrosted. If it has, it should be used as soon as possible. Defrosted food may only be refrozen after it has been cooked.

Message	Cause and remedy
⚠ lights up in the display and a fault code F with numbers may appear. An alarm also sounds.	There is a fault. ■ Switch the alarm off by tapping *OK*. ■ Contact Customer Service. To report the fault, you need the fault code and also the model identifier and serial number of your refrigeration appliance. You can access this information **i** in the display: ■ Tap *OK*. The appliance data required will be shown on the display. ■ Tap *OK*. ■ To switch off the refrigeration appliance, use the < or > sensor control to scroll to the ⏻ symbol. ■ To exit the information display, use the < or > sensor control to scroll to the ⮌ symbol. ■ Tap *OK*.
	There is an appliance fault: this display always has priority over any settings which have just been selected. An appliance fault has priority over any current door and/or temperature alarms displayed.

Troubleshooting

Interior lighting

⚠ Risk of electric shock due to exposed, live electrical components.
When removing the lighting cover, there is a risk of coming into contact with live electrical components.
Do not remove the lighting cover. The LED lighting may only be repaired or replaced by the Miele Customer Service Department.

⚠ Risk of injury from LED lighting.
This lighting corresponds to risk group RG 2. If the cover is defective, there is a risk of eye injury.
If the lighting cover is defective, do not look from a close range directly into the lighting with optical instruments (e.g. magnifying glass or similar).

Problem	Cause and remedy
The interior lighting is not working.	The refrigeration appliance has not been switched on. ■ Switch the refrigeration appliance on.
	Sabbath mode is switched on: the display is dark and the refrigeration appliance is cooling. ■ Touch *OK*. will appear in the display. ■ Touch *OK*. When the Sabbath mode function is switched on, a dot appears in the upper corner of the display •. ■ Touch *OK*. When the Sabbath mode function is switched off, the dot in the upper corner of the display goes out.
	To avoid overheating, the lighting switches itself off automatically after approx. 15 minutes if the appliance door is left open. If this is not the case, then there is a fault. ■ Call the Miele Customer Service Department.
The interior lighting is pulsating.	This is not a fault. The door alarm has been activated.

Noises

The refrigeration appliance is producing various noises during operation.
If the cooling performance is low, the refrigeration appliance will conserve energy but operate for longer. The volume will be lower.
Food will be chilled faster if the cooling performance is high.
The volume will be higher.

Normal noises	What is causing the noises?
Hissing	Refrigerant is being injected into the cooling circuit.
Bubbling, gurgling, splashing	Refrigerant is circulating through the pipes.
Humming	The refrigeration appliance is cooling.
Clicking	The thermostat is switching the compressor on or off.
Humming, whirring	The fan is running. The automatic door opener (depending on the model) is opening or closing the appliance door.
Cracking	Material in the refrigeration appliance is expanding.
Rattling	Valves or flaps are active.
Buzzing (refrigeration appliances with water container)	Water is being pumped out of the water container.
Slurping (refrigeration appliances with soft-close mechanism)	The appliance door with soft-close mechanism is being opened or closed.
Please bear in mind that a certain amount of noise is unavoidable (from the compressor and the refrigerant circulating through the cooling circuit).	

Troubleshooting

Noises	Cause and remedy
Vibrating, rattling, clinking	The refrigeration appliance is uneven. Use a level to check and adjust the alignment of the refrigeration appliance. The refrigeration appliance is aligned by raising or lowering the adjustable feet (depending on the model) underneath it. **For built-in appliances (depending on the model)**: For niches of 140 cm and more: place the stabilising rods supplied underneath the appliance base.
	The refrigeration appliance is touching another appliance or piece of furniture. Move it away.
	Drawers, baskets or shelves are jiggling or are stuck. Check all removable items and refit them correctly.
	Bottles or containers are touching. Separate bottles or containers slightly.
	The transport cable clips (depending on the model) are hanging loose at the back of the appliance. Remove the transport cable clips.

Information to help you rectify faults yourself and about Miele spare parts can be found at www.miele.com/service.

Contact in the event of a fault

In the event of a fault which you cannot remedy yourself, please contact your Miele dealer or Miele Customer Service.

You can book a Miele Customer Service call-out online at www.miele.com/service.

Contact information for Miele Customer Service can be found at the end of this document.

Please quote the model identifier and serial number of your appliance (SN) when contacting Miele Customer Service. Both numbers can be found on the data plate inside the refrigeration appliance or, depending on the model, in Settings mode under Information **i**.

EPREL database

Since 1 March 2021, information on energy labelling and ecodesign requirements has been available in the European Product Database (EPREL). You can find the product database at the following link https://eprel.ec.europa.eu/. You will be asked to enter the model identifier.

The model identifier can be found on the data plate inside the refrigeration appliance or, depending on the model, in Settings mode under Information **i**.

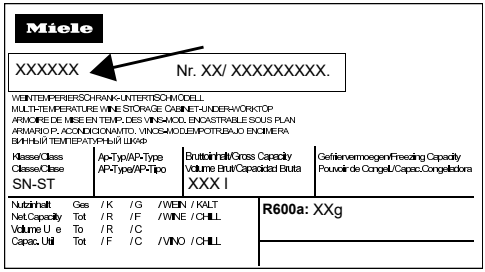

Warranty

For information on the appliance warranty specific to your country please contact Miele. See back cover for address.

In the UK, your appliance warranty is valid for 2 years from the date of purchase. However, you must activate your cover by calling 0330 160 6640 or registering online at www.miele.co.uk.

Information

EU Conformity declaration

Miele hereby declares that this fridge-freezer complies with Directive 2014/53/EU.

The complete text of the EU declaration of conformity is available from one of the following internet addresses:

- Products, Download from www.miele.ie
- For service, information, operating instructions etc: go to https://miele.ie.manuals and enter the name of the product or the serial number

Frequency range of the WiFi module	2.4000–2.4835 GHz
Maximum transmission power of the WiFi module	< 100 mW

UK Conformity declaration

Miele hereby declares that this fridge-freezer complies with UK Radio Equipment Regulations 2017, as amended.

The complete text of the UK declaration of conformity is available from one of the following internet addresses:

- Products, Download from www.miele.co.uk
- For service, information, operating instructions etc: go to https://miele.co.uk/manuals and enter the name of the product or the serial number

Frequency band of the WiFi module	2.4000 GHz – 2.4835 GHz
Maximum transmitting power of the WiFi module	< 100 mW

This **Statement of Compliance** confirms this Miele product fully complies with the **Product Security and Telecommunications Infrastructure (Security Requirements for Relevant Connectable Products) Regulations 2023.**

1) Household Appliance – *Freezer - 120002, 120003, 220009, 320001, 320002*
Refrigerator - 110001, 110002, 210010, 310001, 310002, 310003
Fridge-freezer - 130001, 130002, 130003, 130004, 330001, 330002, 330005
Wine unit - 210007, 210011, 310004, 330004

2) Manufactured by: Miele & Cie KG,
Carl Miele Street 29, 33332 Gutersloh Germany
Imported by and contact point: Miele Company Ltd, Fairacres, Marcham Road, Abingdon, Oxon, OX14 ITW Great Britain

3) The defined support period at the time of first supply is 10 years

4) To report vulnerabilities and cybersecurity issues please contact: psirt@miele.com

5) Signature 
Name: **Paul Wright**
Company Position: **Head of Technical Management**
Date of signature: **19th March 2024**
Place of signature: **Abingdon, Oxfordshire**

Copyrights and licences

For the purpose of operating and controlling the communication module, Miele uses proprietary or third-party software that is not covered by open source licensing terms. This software/these software components are protected by copyright. The copyrights held by Miele and third parties must be respected.

Furthermore, the communication module integrated in the appliance contains software components which are distributed under open source licence conditions. The open source components contained in the appliance along with the corresponding copyright notices, copies of the licensing terms valid at the time and any further information can be accessed locally by IP via a web browser (http[s]://<IP address>/Licenses). The liability and warranty arrangements for the open source licences displayed in this location only apply in relation to the respective rights holders.

United Kingdom
Miele Co. Ltd., Fairacres, Marcham Road, Abingdon, Oxon, OX14 1TW
Tel: 0330 160 6600, Internet: www.miele.co.uk, E-mail: info@miele.co.uk

Australia
Miele Australia Pty. Ltd.
ACN 005 635 398
ABN 96 005 635 398
Level 4, 141 Camberwell Road
Hawthorn East, VIC 3123
Tel: 1300 464 353
E-mail: info@miele.com.au
Internet: www.miele.com.au

China Mainland
Miele Electrical Appliances Co. Ltd.
No. 82, Shimenyi Road, JingAn District
Shanghai, China, P.R.C
Post Code: 200040
Phone: +86 21 6157 3500
Fax: +86 21 6157 3511
E-mail: info@miele.cn
Internet: www.miele.cn

Hong Kong, China
Miele (Hong Kong) Ltd.
41/F - 4101, Manhattan Place
23 Wang Tai Road
Kowloon Bay, Hong Kong
Tel: (852) 2610 1025
Fax: (852) 3579 1404
E-mail:
customerservices@miele.com.hk
Website: www.miele.hk

India
Miele India Pvt. Ltd.
1st Floor, Copia Corporate Suites,
Commercial Plot 9, Mathura Road,
Jasola, New Delhi - 110025
E-mail: customercare@miele.in
Website: www.miele.in

Ireland
Miele Ireland Ltd.
2024 Bianconi Avenue
Citywest Business Campus
Dublin 24
Tel: (01) 461 07 10
Fax: (01) 461 07 97
E-mail: info@miele.ie
Internet: www.miele.ie

Malaysia
Miele Sdn Bhd
Suite 12-2, Level 12
Menara Sapura Kencana
Petroleum
Solaris Dutamas No. 1
Jalan Dutamas 1
50480 Kuala Lumpur, Malaysia
Phone: +603-6209-0288
Fax: +603-6205-3768

New Zealand
Miele New Zealand Limited
IRD 98 463 631
8 College Hill
Freemans Bay, Auckland 1011
Tel: 0800 464 353
E-mail: customercare@miele.co.nz
Internet: www.miele.co.nz

Singapore
Miele Pte. Ltd.
29 Media Circle
#11-04 ALICE@Mediapolis
Singapore 138565
Tel: +65 6735 1191
Fax: +65 6735 1161
E-mail: info@miele.com.sg
Internet: www.miele.sg

South Africa
Miele (Pty) Ltd.
63 Peter Place, Bryanston 2194
P.O. Box 69434, Bryanston 2021
Tel: (011) 875 9000
Fax: (011) 875 9035
E-mail: info@miele.co.za
Internet: www.miele.co.za

Thailand
Miele Appliances Ltd.
BHIRAJ TOWER at EmQuartier
43rd Floor Unit 4301-4303
689 Sukhumvit Road
North Klongton Sub-District
Vadhana District
Bangkok 10110, Thailand

United Arab Emirates
Miele Appliances Ltd.
Showroom 1, Eiffel 1 Building
Sheikh Zayed Road, Umm Al Sheif
P.O. Box 114782 - Dubai
Tel. +971 4 3044 999
Fax. +971 4 3418 852
800-MIELE (64353)
E-mail: info@miele.ae
Website: www.miele.ae

Manufacturer: Miele & Cie. KG, Carl-Miele-Straße 29, 33332 Gütersloh, Germany

Miele

KF 7742 ...

en-GB

M.-Nr. 12 945 350 / 04 / 002