Miele

Operating instructions
Fridge-freezer



It is **essential** to read the operating and installation instructions before setup, installation, and commissioning. This prevents both personal injury and damage to the appliance.

en-GB

M.-Nr. 12 126 540

Contents

Warning and Safety instructions .. **3**

Sustainability and environmental protection **12**
How to save energy 13

Installation **14**
Ordering printed installation instructions 14
Fastening the refrigeration appliance in the building-in niche 14
Installation site 15
Climate range 16
Side-by-side combinations 17
Ventilation 17
Changing the door hinging 17
Furniture door (valid for KD(N) 7714 E, KD(N) 7724 E) 17
Horizontal and vertical gaps 17
Weight of the furniture door 19
Building-in dimensions 20
Installation in a tall unit/side view 20
Connections and ventilation 22
Electrical connection 23

Guide to the appliance **25**
Adjusting the interior fittings 28
Moving the door shelf/bottle shelf 28
Adjusting or removing the bottle holder (depending on model) 28
Moving the shelves 28
Moving the variable bottle rack . 28
Accessories supplied 29
Optional accessories 29

Switching on and off **30**
Before using for the first time 30
Switching the refrigeration appliance on 30

The correct temperature **31**
... in the refrigerator section 31
... in the freezer zone 31
Temperature display 31
Setting the temperature 31
Possible temperature settings 31

Using Party mode (SuperCool/ SuperFreeze) **32**

Door alarm **33**

Storing food in the fridge zone **34**
Different storage zones 34
Temperature indicator for the coldest area 34
Should food be stored loose or in packaging? 35

Storing food in the DailyFresh zone **36**
DailyFresh ExtraCool drawer 36
Changing the humidity level in the DailyFresh drawer 36

Freezing and storing fresh food **39**
Cooling drinks quickly 40
Making ice cubes 40

Cleaning and care **41**
Cleaning agents 41
Preparing the refrigeration appliance for cleaning 41
Cleaning the inside of the appliance 41
Removing and dismantling accessories for cleaning 42
Cleaning the door seal 42
Cleaning the ventilation gaps 43
After cleaning 43
Defrosting 43

Troubleshooting **44**
Noises 49

Service **51**
Contact in the event of a fault 51
EPREL database 51
Warranty 51

This refrigeration appliance complies with current safety requirements. Inappropriate use can, however, lead to personal injury and material damage.
Please read the operating and installation instructions carefully before using the refrigeration appliance for the first time. They contain important information on installation, safety, use and maintenance. This is to protect yourself from injury, and from damaging your refrigeration appliance.
In accordance with standard IEC 60335-1, Miele expressly and strongly advises that you read and follow all information provided on installing the refrigeration appliance, as well as the warning and safety notes.
Miele cannot be held liable for injury or damage caused by non-compliance with these instructions.
Keep these operating and installation instructions in a safe place and pass them on to any future owner.

Correct application

▶ This refrigeration appliance is intended for use in the home and in similar environments; for example:
– In shops, offices and similar work settings
– On agricultural estates
– By the guests in hotels, motels, bed and breakfasts, and other typical home settings.
This refrigeration appliance is not intended for outdoor use.

▶ This appliance is intended for domestic use only for cooling and storing food and drink as well as for storing deep frozen food, freezing fresh food and for making ice.
Any other usage is not supported by the manufacturer and could be dangerous.

▶ This refrigeration appliance is not suitable for storing and keeping cool medicines, blood plasma, laboratory preparations or similar substances or products that are subject to the Medical Device Directive. Incorrect use of the refrigeration appliance for such purposes may cause deterioration of the items stored. The refrigeration appliance is also not suitable for use in areas where there is a risk of explosion. Miele cannot be held liable for damage caused by improper or incorrect use or operation of the appliance.

▶ The appliance can only be used by people with reduced physical, sensory or mental capabilities, or lack of experience and knowledge, if they are supervised whilst using it, or have been shown how to use it in a safe way and recognise and understand the consequences of incorrect operation.

Safety with children

▶ Children under 8 years of age must be kept away from the refrigeration appliance unless they are constantly supervised.

▶ Children 8 years and older may only use the appliance unsupervised if they have been shown how to use it in a safe way and recognise and understand the consequences of incorrect operation.

▶ Children must not be allowed to clean or maintain the appliance unsupervised.

▶ Please supervise children in the vicinity of the appliance and do not let them play with it.

▶ Danger of suffocation. Whilst playing, children may become entangled in packaging material (such as plastic wrapping) or pull the packaging material over their head, presenting the risk of suffocation. Keep packaging material away from children.

Technical safety

▶ The coolant circuit has been checked for leaks. The refrigeration appliance complies with statutory safety requirements and the appropriate EU directives.



If the cooling circuit is damaged, refrigerant and oil can escape and ignite.

▶ Warning: fire hazard/flammable materials. This symbol is on the compressor and indicates flammable materials. Do not remove this sticker.

The refrigerant inside the appliance (details on the data plate) is environmentally friendly but flammable.
The use of this refrigerant does, however, sometimes lead to a slight increase in the noise level of the appliance. In addition to the noise of the compressor, you might be able to hear the refrigerant flowing around the cooling circuit. Unfortunately, this cannot be avoided, but it does not affect the performance of the refrigeration appliance.
When transporting and installing the refrigeration appliance, ensure that no parts of the cooling circuit are damaged. Splashes of refrigerant can damage the eyes and leaking refrigerant can ignite.
In the event of damage:

- Avoid naked flames or anything which creates a spark.
- Disconnect the refrigeration appliance from the mains electricity supply.
- Ventilate the room where the refrigeration appliance is located for several minutes.
- Contact the Miele Customer Service Department.

▶ The more refrigerant there is in a refrigeration appliance, the larger the room it should be installed in. In the event of a leakage, if the appliance is in a small room, there is the danger of a combustible gas/air mixture building up. For every 8 g of refrigerant at least 1 m^3 of room space is required. The amount of refrigerant in the refrigeration appliance is stated on the data plate inside the appliance.

▶ If the ventilation cross-sections are covered or blocked, a combustible gas/air mixture can form if the cooling circuit is damaged. It is essential to observe the required ventilation cross-sections. The ventilation cross-sections must not be covered or blocked in any way.

▶ To avoid the risk of damage to the appliance, make sure that the connection data (fuse rating, frequency and voltage) on the data plate corresponds to the household supply.
Check that this is the case before connecting the appliance. Consult a qualified electrician if in any doubt.

▶ The electrical safety of this appliance can only be guaranteed when correctly earthed. It is essential that this standard safety requirement is met. If in any doubt please have the electrical installation tested by a qualified electrician.

▶ Temporary or permanent operation on an autonomous power supply system or a power supply system that is not synchronised with the mains power supply (e.g. island networks, back-up systems) is possible. A prerequisite for operation is that the power supply system complies with the specifications of EN 50160 or an equivalent standard.
The function and operation of the protective measures provided in the domestic electrical installation and in this Miele product must also be maintained in isolated operation or in operation that is not synchronised with the mains power supply, or these measures must be replaced by equivalent measures in the installation. As described, for example, in the current version of BS OHSAS 18001–2 ISO 45001.

▶ If the mains connection cable is damaged, it must only be replaced with a specific mains connection cable of the same type (available from the Miele online shop or Miele Customer Service). For safety reasons, such replacement may only be carried out by a qualified specialist or Miele Customer Service.

▶ Do not connect the appliance to the mains electrical supply by a multi-socket adapter or extension lead. These are a fire hazard and do not guarantee the required safety of the appliance.

▶ If moisture gets into electrical components or into the mains connection cable, it could cause a short circuit. Therefore, do not operate this refrigeration appliance in areas which are exposed to moisture (e.g in a garage or utility room).

▶ This appliance must not be used in a non-stationary location (e.g. on a ship).

▶ Do not use a damaged appliance. It could be dangerous. Check the appliance for visible signs of damage.

▶ For safety reasons, this appliance may only be used after it has been built in.

▶ The appliance must be isolated from the electricity supply during installation, maintenance and repair work. It is only completely isolated from the power supply when:

- the mains fuses are switched off, or
- the screw-out fuse is removed (where applicable), or
- the mains cable has been unplugged. Pull on the plug and not the cable when disconnecting it from the power supply.

▶ Unauthorised installation, maintenance or repairs could result in unforeseen dangers for the user, for which the manufacturer cannot accept liability.
Installation, maintenance or repairs must only be carried out by a qualified specialist or Miele Customer Service.

▶ The manufacturer's warranty will be invalidated if the refrigeration appliance is not repaired by a qualified specialist or Miele Customer Service.

▶ We recommend replacing defective components with original spare parts. If original Miele spare parts are installed correctly, Miele ensures full compliance with safety requirements and the warranty remains valid.

▶ This refrigeration appliance is fitted with a special lamp to cope with particular conditions (e.g. temperature, moisture, chemical resistance, abrasion resistance and vibration). This lamp must only be used for the purpose for which it is intended. The lamp is not suitable for room lighting. Replacement lamps may only be fitted by a qualified specialist or by Miele Customer Service. This refrigeration appliance contains several light sources with at least energy efficiency class E.

Proper installation

▶ Install the refrigeration appliance in accordance with the installation instructions.

▶ Two people are required to install the refrigeration appliance.

▶ Change the door hinging (if necessary) as described in the installation instructions.

▶ Only install the refrigeration appliance in a solid, rectangular and level housing unit, positioned on an even and level floor.

Correct use

▶ This refrigeration appliance is designed for use within specific ambient temperatures (climate range). Do not use in ambient temperatures for which it is not designed. The climate range is stated on the data plate in the interior cabinet of the refrigeration appliance. A lower ambient temperature will cause the compressor to switch off for longer periods, meaning that the refrigeration appliance is unable to maintain the required temperature.

▶ The ventilation cross-sections must not be covered or blocked in any way. This can impair the proper ventilation of the appliance, increase the energy consumption and cause damage to the components.

▶ Risk of damage due to greasy or oily foods. If the refrigeration appliance or the appliance door is used for storing food which contains fat or oil, make sure that it does not come into contact with plastic components. Any spillages of oil or fat could cause stress cracks to the plastic and cause it to break or split.

▶ Risk of fire and explosion due to flammable mixes of gases. Do not store explosive materials in the refrigeration appliance or any products containing propellants (e.g. spray cans). Electrical components can cause flammable mixes of gases to ignite. The spray cans in question can be identified by the contents printed on the can or by a flame symbol. Electrical components can cause escaping gases to ignite.

▶ Danger of explosion. Do not operate any electrical equipment (e.g. an electric ice-cream maker) inside the refrigeration appliance. This can cause sparking and explosion.

▶ Danger of injury and damage to the appliance. Do not store cans or bottles containing carbonated drinks or liquids which could freeze in the freezer zone. Otherwise they could burst.

▶ Danger of injury and damage to the appliance. When cooling drinks quickly in the freezer zone, make sure bottles are not left in for more than one hour. Otherwise they could burst.

▶ Danger of injury. Never handle frozen food or the metal parts of the appliance with wet hands. Your hands may freeze to the frozen food or to the metal.

▶ Danger of injury. Do not take ice cubes out with your bare hands and never place ice cubes or ice lollies in your mouth straight from the freezer zone. The very low temperature of the frozen food can cause frost burn to the lips and tongue.

▶ Do not refreeze partially or fully defrosted food. Consume defrosted food as soon as possible, as it will lose its nutritional value and spoil if left for too long. Defrosted food may only be re-frozen after it has been cooked.

▶ Observe the manufacturer's “use-by” dates and storage instructions given on food to avoid the risk of food poisoning. Storage times will depend on several factors, including the freshness and quality of the food, as well as the temperature at which it is stored.

Accessories and spare parts

▶ We recommend using original Miele accessories. If other parts are used, warranty, performance and/or product liability claims will be invalidated.

▶ Miele original spare parts are kept in stock for at least 10 years and up to 15 years after discontinuation of your refrigeration appliance.

Cleaning and care

▶ Do not use any oils or grease on the door seals, as these will cause the seals to deteriorate and become porous with time.

▶ Do not use a steam cleaning appliance to clean or defrost this appliance.
Steam could reach electrical components and cause a short circuit.

▶ Sharp edged or pointed objects will damage the evaporator, causing irreversible damage to the appliance. Do not use sharp edged or pointed objects to

- remove frost and ice,
- separate frozen food or remove ice trays.

▶ Do not place electric heaters or candles in the appliance to defrost it. These can damage the plastic parts.

▶ Do not use defrosting sprays or de-icers. Defrosting sprays and de-icers can contain substances which could damage the plastic parts or which might cause a build-up of explosive gases and pose a danger to health.

Transport

▶ To avoid damage to the refrigeration appliance, always transport it upright and in its packaging.

▶ Danger of injury and damage to the appliance. The refrigeration appliance is very heavy and must be transported by two people.

Disposal of your old appliance

▶ Children playing could become trapped in the refrigeration appliance and could suffocate.

- Remove the appliance door(s).
- Remove the drawers.
- Leave the shelves in the refrigeration appliance so that children cannot climb inside.
- If your old refrigeration appliance has a door lock, destroy it. This will prevent the risk of children playing accidentally locking themselves in the appliance and endangering their lives.

▶ Risk of electric shock!

- Cut the plug off the mains connection cable.
- Cut the mains connection cable off the old appliance.

Dispose of the plug and mains connection cable separately from the old appliance.

▶ During and after disposal, make sure that the refrigeration appliance is not placed near petrol or other flammable gases and liquids.

▶ Risk of fire due to escaping oil or refrigerant.
The refrigerant and oil inside the appliance are flammable. In high enough concentrations, escaping refrigerant or oil can ignite if they come into contact with an external heat source.
During disposal, make sure that the cooling circuit is not damaged. This prevents refrigerant and oil escaping in an uncontrolled manner (see the data plate for details of the refrigerant).

▶ Splashes of coolant can damage the eyes. Be careful not to damage any part of the pipework whilst awaiting disposal, e.g. by

- puncturing the coolant channels in the condenser,
- bending any pipework, or
- scratching the surface coating.

Symbol on the compressor (depending on model)

This information is only relevant for recycling. There is no risk during normal operation.



▶ The oil in the compressor can be fatal if swallowed or if it penetrates the airways.

Sustainability and environmental protection

Disposing of the packaging material

The packaging material is used for handling and protects the appliance from transport damage. The packaging material used is selected from materials which are environmentally friendly for disposal and can generally be recycled.

Recycling the packaging material reduces the use of raw materials. Use material-specific collection points for valuable materials and take advantage of return options. Your Miele dealer will take the packaging material away.

Disposing of your old appliance

Electrical and electronic appliances contain many valuable materials. They also contain certain materials, compounds and components which were essential for their correct functioning and safety. These could be hazardous to human health and to the environment if disposed of with household waste or if handled incorrectly. Please do not, therefore, dispose of your old appliance with household waste.



Take care not to damage your refrigeration appliance before or during disposal in an authorised, environmentally friendly manner.
This is to ensure that refrigerant in the cooling circuit and oil in the compressor is contained, and will not leak into the environment.

Instead, please make use of officially designated collection and disposal points to dispose of and recycle electrical and electronic appliances in your local community, with your dealer or with Miele, free of charge. By law, you are solely responsible for deleting any personal data from the old appliance prior to disposal. You are legally obliged to remove any old batteries which are not securely enclosed by the appliance and to remove any lamps without destroying them, where this is possible. These must be taken to a suitable collection point where they can be handed in free of charge. Please ensure that your old appliance poses no risk to children while being stored for disposal.

How to save energy ...

How to save energy:	
Installation site	The refrigeration appliance has to cool more often at higher ambient temperatures and consumes more energy in the process. Therefore, you should: - Install the refrigeration appliance in a well-ventilated room. - Do not install the refrigeration appliance near to a heat source (heater element, cooker). - Protect the refrigeration appliance from direct sunlight. - Ensure an ideal ambient temperature of 20 °C. - Clean the ventilation gaps on a regular basis to remove any dust.
Temperature setting	The colder the temperature, the higher the energy consumption. The following settings are recommended: - 4 to 5 °C in the refrigerator section. - -18 °C in the freezer zone
Use	Energy consumption is increased by heat input and impeded air circulation. Therefore: - Only open the appliance door/appliance doors when necessary and for as short a time as possible. Arrange the food in such a way that makes it easy to find in the appliance. - Always close the appliance door/appliance doors properly after opening. - Allow hot food and drinks to cool down before placing them in the refrigeration appliance. - Store food well packaged or covered. - Do not overfill the compartments to allow air to circulate. - Place frozen food in the fridge zone to defrost.

Carry out the installation in accordance with the installation instructions (see QR code).

Material number. 12 146 040 -
KD 77x4 E, KDN 77x4 E (fixed door)

Material number 12 146 060 -
KD 7713 E, KDN 7713 E (sliding door)

Ordering printed installation instructions

You can order printed installation instructions free of charge from Miele.

All the contact information you need for Miele can be found at the end of this document. Quote the model identifier and the serial number from the data plate when placing your order.

Fastening the refrigeration appliance in the building-in niche

⚠ Risk of damage and danger of injury due to the refrigeration appliance tipping over.

This refrigeration appliance is very heavy and can tip forwards when the appliance door is open.

Keep the appliance door(s) closed until the refrigeration appliance has been built in.

It is essential that you secure the refrigeration appliance in the niche using the enclosed retaining and fastening parts in accordance with the installation instructions.

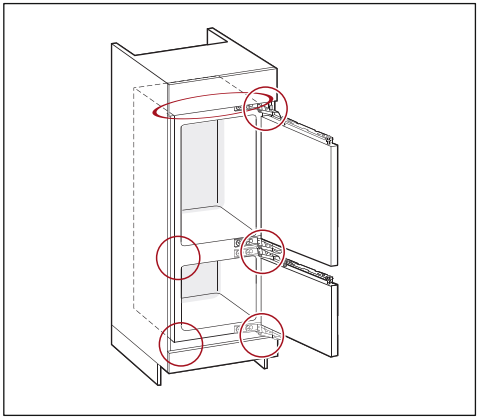

KD 77x4 E, KDN 77x4 E (fixed door)

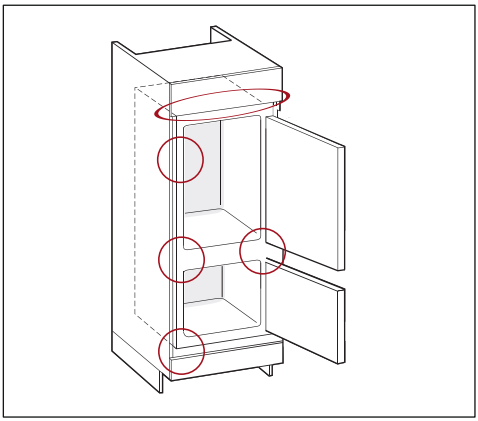

KD 7713 E, KDN 7713 E (sliding door)

Installation site

⚠ Fire risk and risk of damage from appliances which give off heat.

Appliances which give off heat can catch fire and set fire to the refrigeration appliance.

The mains connection cable must not come into contact with heat sources.

This refrigeration appliance must not be installed underneath a hob.

⚠ Fire risk and danger of damage from open flames.

Open flames can set fire to the refrigeration appliance.

Keep open flames (e.g. a candle) away from the refrigeration appliance.

⚠ Risk of fire and damage due to improper installation.

If the mains plug and mains connection cables touch the back of the refrigeration appliance, they may be damaged by vibrations and cause a short circuit.

Mains plugs or mains connection cables must not touch the refrigeration appliance.

Mains connection cables must not be trapped or damaged.

Do not connect any other appliances to sockets located directly behind this refrigeration appliance.

Do not place or operate multi-socket adapters, distributor strips or other electronic devices (such as halogen transformers) behind the appliance.

This appliance should be installed in a dry, well-ventilated room.

Only install the refrigeration appliance in a solid, rectangular and level housing unit, positioned on an even and level floor.

⚠ Risk of damage due to high humidity.
In environments with high humidity, condensation can build up on external refrigeration appliance panels. This condensation can cause corrosion on external appliance panels.
Install the refrigeration appliance in a dry and/or air-conditioned room with sufficient ventilation.
After installation, please make sure that the appliance door/appliance doors closes/close properly and the refrigeration appliance is installed in accordance with these installation instructions. It is essential to comply with the specified ventilation cross-sections.

When deciding on the installation site, please bear in mind that your refrigeration appliance will consume more energy if installed near to a heater, a cooker or another appliance that gives off heat. Avoid direct sunlight. Higher ambient temperatures increase energy consumption as the compressor runs for longer.

Climate range

This refrigeration appliance is designed for use within specific ambient temperatures (climate range). Do not use in ambient temperatures for which it is not designed.
A lower ambient temperature leads to the compressor switching off for longer periods. This can cause the internal temperature in the refrigeration appliance to rise with the risk of food deteriorating and going off.

The climate range is stated on the data plate in the interior cabinet of the refrigeration appliance.

Climate range	Ambient temperature
SN	10 to 32 °C
N	16 to 32 °C
ST	16 to 38 °C
T	16 to 43 °C
SN-ST	10 to 38 °C
SN-T	10 to 43 °C

A refrigeration appliance from the SN climate range can operate without any difficulties in rooms with a cooler ambient temperature (down to +5 °C).

Side-by-side combinations

⚠ Risk of damage due to condensation on external appliance panels.
In environments with high humidity and a lack of ventilation, condensation can build up on external appliance panels, which can cause corrosion.
Do not place refrigeration appliances directly next to or on top of one another if the refrigeration appliance is not approved for this.

Ventilation

⚠ Fire risk and risk of damage due to inadequate ventilation.
If the refrigeration appliance is not ventilated sufficiently, the compressor will run more frequently and for longer periods. This causes increased energy consumption and an increased compressor operating temperature, which can result in damage to the refrigeration appliance.
Please ensure that there is adequate ventilation around the refrigeration appliance:
It is essential to observe the required ventilation cross-sections.
The ventilation cross-sections must not be covered or blocked in any way.
Clean the ventilation areas regularly to remove dust and dirt.

Air at the back of the refrigeration appliance gets warm. The appliance housing unit must therefore be constructed to allow sufficient space for ventilation (see “Installation dimensions” and the installation instructions).

Changing the door hinging

⚠ Danger of injury and damage to the appliance due to heavy door.
There is an increased risk of injury and damage if the door hinging is installed by a single person.
Always change the door hinging with the help of a second person.

⚠ Risk of crushing on the door hinge.
Fingers can get trapped in or around the hinge.
Leave the door hinge open and do not close it.
Do not reach into the door hinge during conversion.

Change the door hinge in accordance with the installation instructions.

Furniture door (valid for KD(N) 7714 E, KD(N) 7724 E)

Horizontal and vertical gaps

Depending on the style of kitchen furniture the thickness and edge radius of the furniture door panel and the gap that runs around the door, vertically and horizontally, are specified.

It is essential to pay attention to the following:

– Horizontal gap

The gap between the furniture door panel and the housing unit door above or below it must be at least 3 mm.

– Vertical gap

If the gap between the refrigeration appliance furniture door panel and the adjoining housing unit door or wall on the hinged side is too small, the appliance door could collide with the adjoining housing unit door or wall when opened.

It may be necessary to adjust the size of this gap to suit the thickness and edge radius of the appliance furniture door.

This must be taken into consideration when planning your kitchen and when replacing an old refrigeration appliance with a new one to ensure the installation conditions required are met.

Appliance furniture door thickness **A** [mm]	Gap **X** [mm] for different edge radii **B**			
	R0	R1	R2	R3
≥16–19	2.5			
20	3	3	2.5	2.5
21	3	3	2.5	2.5
22	4	3.5	3	3

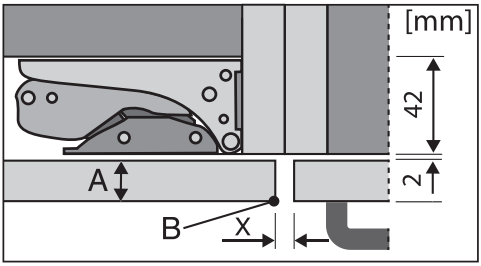

Adjoining kitchen furniture front

A = Furniture front thickness
B = Edge radius
X = Gap

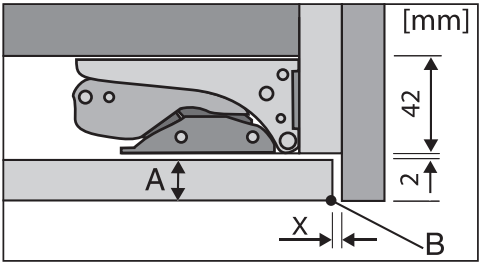

Adjoining side wall

A = Furniture front thickness
B = Edge radius
X = Gap

Tip: Fit a spacer between the housing unit carcase and the side wall. This way you will get a sufficiently wide gap.

Weight of the furniture door

⚠ If the furniture door panel is too heavy, this can cause damage.
Fitting a furniture door panel which is heavier than the maximum permitted weight could damage the hinges. This can cause subsequent functional problems.

The maximum permissible weights of the furniture doors in kg are:

Refrigeration appliance	Upper furniture door	Lower furniture door
KDN 77x4 E	15	15

Building-in dimensions

Installation in a tall unit/side view

KD(N) 7714 E, KD(N) 7724 E

All dimensions are given in mm.

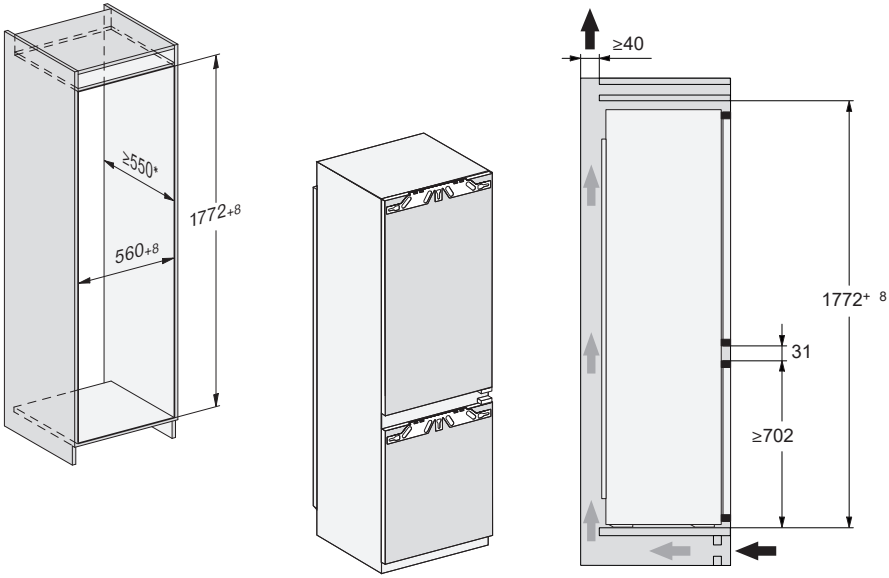

* The declared energy consumption was calculated in a 560 mm deep niche. The refrigeration appliance is fully functional in a 550 mm niche but the energy consumption will be slightly higher.

Before installation, ensure the housing unit dimensions are the correct size. The specified ventilation cross-sections must be adhered to in order to ensure the correct functioning of the refrigeration appliance.

KD(N) 7713 E

All dimensions are given in mm.

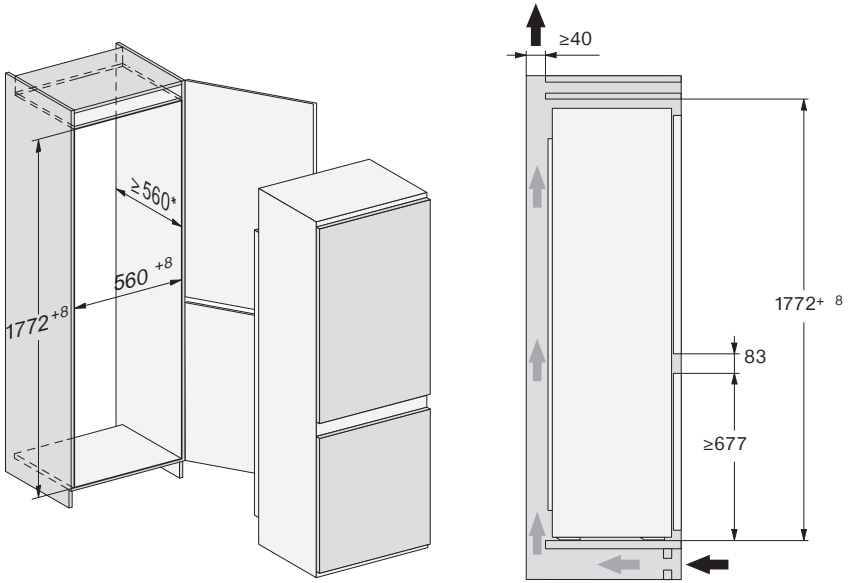

* The declared energy consumption was calculated in a 560 mm deep niche. The refrigeration appliance is fully functional in a 550 mm niche but the energy consumption will be slightly higher.

Before installation, ensure the housing unit dimensions are the correct size. The specified ventilation cross-sections must be adhered to in order to ensure the correct functioning of the refrigeration appliance.

Installation

Connections and ventilation

All dimensions are given in mm.

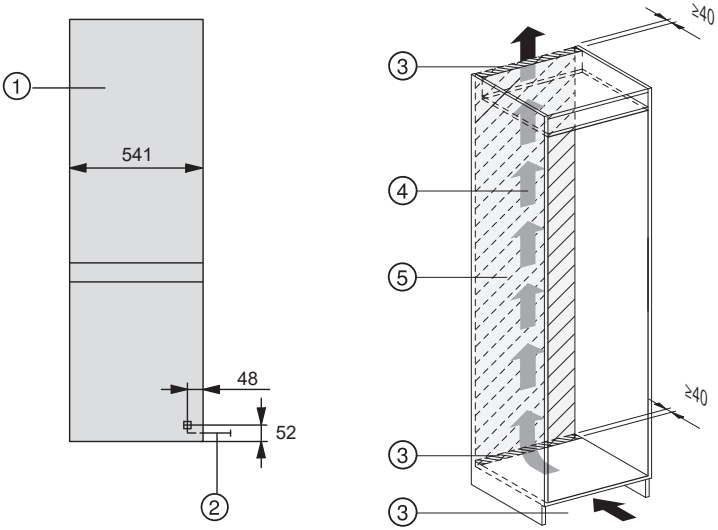

① Front view

② Mains connection cable, length = 2200 mm

③ Ventilation cross-section min. 200 cm^2

④ Ventilation

⑤ No connection sockets in this area

Electrical connection

The refrigeration appliance must only be connected to an earthed socket using the mains connection cable supplied.

The socket must be easily accessible after the refrigeration appliance has been installed. If the socket is not easily accessible, ensure that a suitable means of disconnection is provided on the installation side for each pole.

⚠ Risk of fire from overheating.
Connecting the refrigeration appliance to a multi-socket plug adapter or to an extension lead can overload the cable.
For safety reasons, do not use an extension lead or multi-socket adapter.

The electrical installation must comply with VDE 0100 requirements.

For safety reasons, we recommend using a type ⎓ residual current device (RCD) in the assigned electrical installation for connecting the refrigeration appliance.

If the mains connection cable is damaged, it must only be replaced with a specific mains connection cable of the same type (available from the Miele Customer Service Department). For safety reasons, such replacement may only be carried out by a qualified specialist or the Miele Customer Service Department.

These operating instructions and the data plate indicate the nominal power consumption and the appropriate fuse rating. Compare this information with the data of the on-site electrical connection. If in any doubt, consult a qualified electrician.

Temporary or permanent operation on an autonomous power supply system or a power supply system that is not synchronised with the mains power supply (e.g. island networks, back-up systems) is possible. A prerequisite for operation is that the power supply system complies with the specifications of EN 50160 or an equivalent standard. The function and operation of the protective measures provided in the domestic electrical installation and in this Miele product must also be maintained in isolated operation or in operation that is not synchronised with the mains power supply, or these measures must be replaced by equivalent measures in the installation. As described, for example, in the current version of VDE-AR-E 2510-2.

Connecting the refrigeration appliance

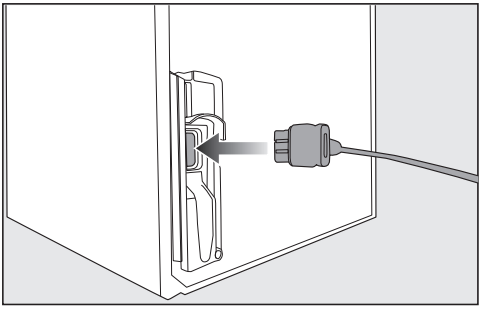

- Insert the plug connector into the socket at the back of the refrigeration appliance.

Make sure that the plug connector has clicked into position correctly.

- Insert the plug of the refrigeration appliance into the socket.

The refrigeration appliance is now connected to the electricity supply.

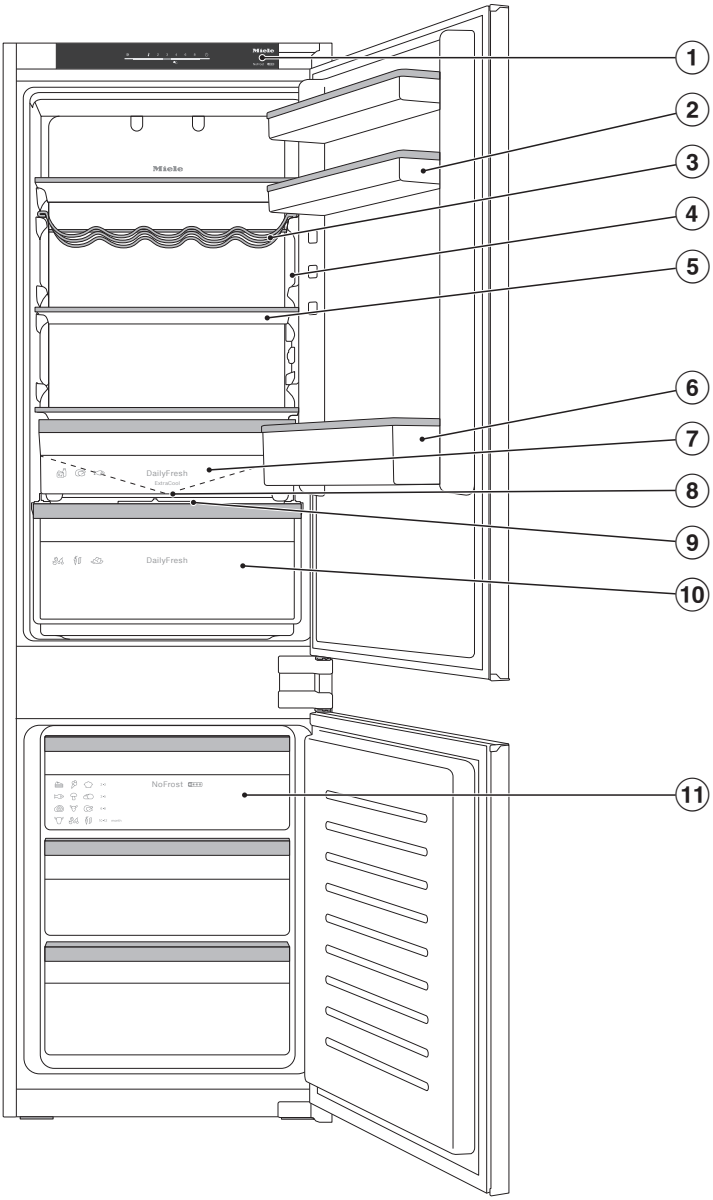

This drawing is for illustration purposes only.

Guide to the appliance

① Control panel

② Shelf with egg tray in the appliance door

③ Flexible bottle rack

④ Interior lighting

⑤ Adjustable shelf

⑥ Bottle shelf with bottle holder:
You can move the bottle holder to the right or left to create space for drinks cartons.

⑦ DailyFresh ExtraCool drawer with low temperature for food which goes off quickly

⑧ Condensate channel and condensate drain hole:
Precipitated condensate runs off and evaporates automatically.

⑨ Compartment lid for setting the humidity level in the DailyFresh drawer

⑩ DailyFresh drawer for fruit and vegetables (humidity-controlled)

⑪ Freezer drawers

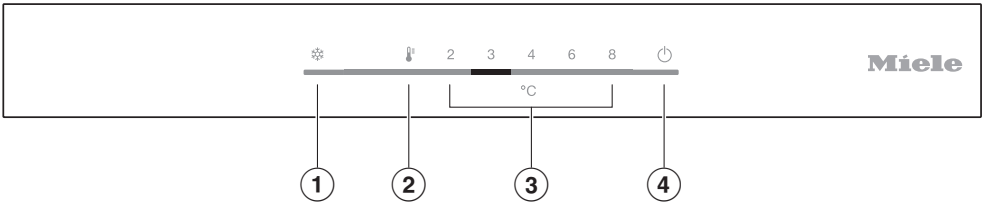

① For switching the SuperCool/SuperFreeze functions on and off (Party mode)
② For setting the temperature
③ Temperature range
④ For switching the refrigeration appliance on/off

Adjusting the interior fittings

Moving the door shelf/bottle shelf

Only move the door/bottle shelves in the appliance door when they are empty.

- Push the door/bottle shelves upwards, then remove them by pulling them forwards.
- Replace the door/bottle shelves at the required height.

Adjusting or removing the bottle holder (depending on model)

The non-slip fins of the bottle holder make bottles more secure when you open and close the appliance door.

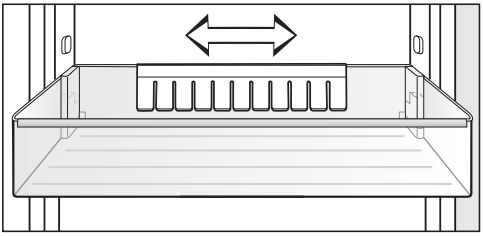

The bottle holder can be moved to the left or right to create more room for drink cartons.

The bottle holder can be removed completely, e.g. for cleaning:

- pull the bottle holder up to remove it.

Moving the shelves

The shelves can be adjusted according to the height of the food.

- Pull the shelf forwards and tilt it downwards to remove it.
- Fit the shelf with the rear edge facing upwards in its new position. The raised edge at the back must face upwards to prevent food from touching the back of the appliance and freezing to it.

Moving the variable bottle rack

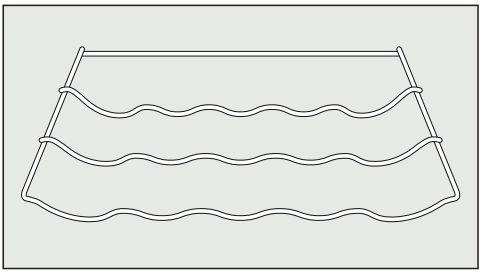

- Lift the bottle rack up slightly at the back and pull it out towards you.
- Reinsert the bottle rack in the desired position.

The rear rail must face upwards to prevent bottles from touching the rear panel of the appliance.

Accessories supplied

Egg tray (depending on model)

Bottle holder (depending on model)

Flexible bottle rack

Ice cube tray

Optional accessories

SoftClose hinges (KD(N) 7714 E, KD(N) 7724 E)

The SoftClose hinges ensure that your appliance doors close very softly and quietly.

Furthermore, they close the appliance door automatically if the angle of the open door is less than 30°.

Products specially tailored to your refrigeration appliance – such as appliance care products and accessories – are available from the Miele online shop, from Miele Customer Service or from your Miele specialist dealer.

You can access the Miele online shop via the following QR code:

Before using for the first time

- Remove all packaging material and protective foil.
- Clean the inside of the appliance and the accessories.

Connecting the refrigeration appliance

- Connect the refrigeration appliance to the electricity supply as described in “Electrical connection”.

Switching the refrigeration appliance on

- Open the appliance door.
- Touch and hold the ⏻ sensor control on the control panel for around 3 seconds.

The temperature display lights up and a buzzer sounds.

The refrigeration appliance will start to cool and the interior lighting will come on when the appliance door is opened.

The refrigeration appliance will gradually reach the pre-set temperatures.

To enable the temperature to get sufficiently cold inside the refrigeration appliance, allow the appliance to run for a few hours before placing food in it. Do not place food in the refrigeration appliance until it has reached the preset temperature.

Do not place food in the freezer zone until it has reached the preset temperature (min. -18 °C).

Switching off the refrigeration appliance

- Touch and hold the ⏻ sensor control on the control panel for around 3 seconds.

A buzzer sounds.

The cooling and interior lighting are switched off.

Please note: the refrigeration appliance is not disconnected from the power supply when it is switched off.

Switching off for longer periods of time

If, during a long absence, the refrigeration appliance is switched off but not cleaned and the door is left shut, there is a danger of mould building up inside the appliance.

It is essential to clean the refrigeration appliance before a long period of absence.

If the refrigeration appliance is not going to be used for a longer period of time, observe the following:

- Switch the refrigeration appliance off.
- Switch off at the wall and disconnect the plug from the socket, or disconnect the fuse.
- Clean the refrigeration appliance and leave the door ajar to air the appliance and avoid odours building up inside.

... in the refrigerator section

We recommend a temperature of **4 °C** in the refrigerator section.

... in the freezer zone

To freeze fresh food, a temperature of **-18 °C** is required. This will prolong the shelf life of your food and retain its quality.
As soon as the temperature rises above -10 °C, the bacteria become active in the food again so it cannot be kept as long. For this reason, partially defrosted or defrosted food must not be re-frozen. Food may be re-frozen once it has been cooked, as the high temperatures achieved when cooking destroy most bacteria.

By keeping the freezer zone at a constant temperature of -18 °C and taking appropriate hygiene measures you can maximise the storage life of your food and avoid food waste.

Temperature display

The temperature display on the control panel always shows the **required** temperature.

Setting the temperature

■ Tap the sensor control on the control panel until the required temperature is displayed.

⚠ Health risk caused by decomposing food.
The preset temperature of **4 °C** in the refrigerator section results in **-18 °C** in the freezer section.
Please note that if the temperature in the refrigerator section is any warmer, the temperature in the freezer section will exceed -18 °C.
To freeze fresh food in the freezer section, a temperature of **-18 °C** is required.
If the temperature in the freezer section is any warmer, the food will also have a shorter shelf life.

The higher or lower the temperature in the refrigerator section, the higher or lower it is in the freezer section.

Possible temperature settings

- Refrigerator section: 2 to 8 °C

If you change the temperature setting:

■ Check the temperature again after a few hours. It will take this long for the appliance to give an accurate reading.

- Wait for approx. 6 hours if the refrigeration appliance is not very full
- Wait for approx. 24 hours if the refrigeration appliance is full

If, after this time, the temperature is still too high or too low:

■ Adjust the temperature again.

Party mode (SuperCool/SuperFreeze) ❄

When the Party mode function ❄ is switched on, the temperature in the **refrigerator section** and **freezer section** will rapidly reduce to the lowest setting (depending on the ambient temperature). The refrigeration appliance will work at full power and lower the temperature.

The Party mode function ❄ is recommended if you wish to chill or freeze large amounts of fresh food or drink quickly.

Tip: Also select the Party mode function ❄ before freezing fresh food. This helps food to freeze quickly and retain its nutrients, vitamins, flavours and appearance.

When the Party mode function ❄ is switched on, the appliance may make more noise than usual.

Tip: Switch on the Party mode function ❄ approx. 4–6 hours before placing food or drinks in the appliance.

The Party mode function ❄ will switch itself off automatically after approx. 50 hours. However, you can switch the Party mode function ❄ off early at any time.

If there is a power cut, the Party mode function ❄ is switched off.

Switching the Party mode function ❄ on and off

- Touch the SuperCool/SuperFreeze (Party mode) ❄ sensor control to switch the function on and off again.

The refrigeration appliance is fitted with a warning system to avoid increased energy consumption and food becoming warm if the appliance door is left open.

The alarm tone will sound if one of the appliance doors is left open for more than a couple of minutes.

The interior lighting will flash after approx. 10 minutes.

As soon as the appliance door is closed, the alarm tone will stop.

Switching the door alarm off early

If the alarm tone annoys you, it can be turned off early.

- Touch the sensor control.

The alarm tone will stop.

Storing food in the fridge zone

Different storage zones

Due to natural air circulation, there are different temperature regions in the refrigerator section.

Cold, heavy air sinks to the lowest section of the refrigeration section. Make use of the different zones when placing food in the appliance.

Warmest area

The warmest area in the refrigerator section is at the top in the front area and in the door. Use this for storing butter and cheese.

Coldest area

The coldest area in the fridge zone is in the DailyFresh ExtraCool drawer and at the back of the appliance.

A temperature setting of 4 °C combined with appropriate hygiene measures delays the propagation of bacteria, e.g. salmonella and listeria, which can lead to serious food poisoning.

Therefore, you should use these areas to store all delicate and highly perishable food, including:

- Fish, meat, poultry
- Cold cuts, ready meals
- Dishes or baked goods containing eggs or cream
- Fresh dough, cake mixtures, pizza or quiche dough
- Raw milk cheese and other raw milk products
- Hummus, vegetable spreads, plant-based cream cheese substitutes
- Pre-packed vegetables
- Other fresh food (with a label stating it should be kept at a temperature of approx. 4 °C)

Tip: Store food in such a way that it does not touch the rear panel of the fridge zone. Otherwise it could freeze to the rear panel.

Temperature indicator for the coldest area

The temperature indicator for the coldest area is located on the left-hand or right-hand inside wall in the coldest area of the fridge zone. You can use the temperature indicator to check the temperature in this area for your delicate and highly perishable food. If the temperature settings are correct, the lowest average temperature will be in the coldest area (between the temperature indicator and the shelf below). This low temperature, combined with appropriate hygiene measures, delays the propagation of bacteria, e.g. salmonella and listeria, which can lead to serious food poisoning.

After initial commissioning of the refrigeration appliance, it may take up to 12 hours before the desired temperature is reached.

The temperature indicator will not display an accurate reading if the appliance door is opened frequently or for long periods. Do not keep the appliance door open for long periods. Check the temperature indicator again after a few hours.

Temperature indicator display



If the temperature indicator displays "OK", the temperature is set correctly. Your delicate and highly perishable food will be refrigerated properly in this area.

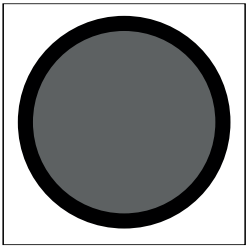

If the temperature indicator does not display "OK", the temperature is too high. Set the temperature to 4°C or colder.

If the ambient temperature fluctuates significantly, check the temperature indicator more frequently. If necessary, adjust the temperature again.

Tip: If the temperature indicator does not display "OK" even when the temperature is set as low as possible and this has been repeatedly checked, contact the Customer Service Department. The temperature indicator is damaged and correct storage of your delicate and highly perishable food cannot be ensured.

Should food be stored loose or in packaging?

Ensure that food stored in the fridge zone is in packaging or covered properly (some exceptions apply in the DailyFresh drawer).
This will prevent food odours from affecting other food, stop food from drying out and also prevent any cross-contamination of germs. This is particularly important when storing meat products. Make sure that food such as raw meat and fish in particular does not come into contact with other food.

By ensuring that the temperature settings are correct and by taking appropriate hygiene measures, you can prolong the storage life of your food considerably. This prevents food waste.

Protein-rich food

Please note that food rich in protein deteriorates faster than other types of food. Shellfish, for example, deteriorates faster than fish, and fish deteriorates faster than meat.

DailyFresh ExtraCool drawer

The DailyFresh ExtraCool drawer is ideal for storing food which goes off quickly, such as:

- Fresh fish and shellfish
- Meat, poultry and sausage
- Deli salads
- Dairy products, such as yogurt, cheese, cream, etc.
- You can also store any other type of food in the DailyFresh ExtraCool drawer, as long as it is packaged.

The DailyFresh ExtraCool drawer has a temperature of approx. 0 °C when a temperature of 2 °C has been set in the fridge zone.
The humidity in the DailyFresh ExtraCool drawer is not increased and cannot be regulated.

The temperature in the DailyFresh ExtraCool drawer is approx. 0 °C.
If the temperature in the refrigerator section is low, minus temperatures may be reached in the DailyFresh ExtraCool drawer. This can cause food to freeze.
Adjust the temperature setting if necessary.

Please note that food rich in protein deteriorates faster than other types of food.
Shellfish, for example, deteriorates faster than fish, and fish deteriorates faster than meat.
For hygiene reasons, always keep these foods **covered or wrapped**.

The DailyFresh drawer provides good storage conditions for fruit and vegetables.

The humidity level in the DailyFresh drawer can also be regulated to suit the food being stored. Food retains its own moisture if stored at a higher humidity and so does not dry out as quickly. The temperature is approximately equivalent to the temperature in the fridge zone.

Remember that the fresher the food when placed in the appliance, the longer it will stay fresh.

Changing the humidity level in the DailyFresh drawer

The humidity level in the DailyFresh drawer largely depends on the type and quantity of food being stored, if stored **unwrapped**.

Tip: If the quantity of food being stored in this compartment is **small**, the humidity level may be too low. If you are only storing a small amount of food, wrap it in airtight packaging.

Tip: Store **cut** fruit or vegetables covered or wrapped so they do not dry out.

Selecting low humidity ◊

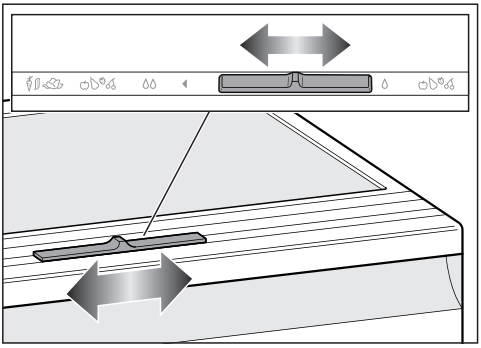

■ Slide the controller to the right.

The compartment lid is open and the humidity drops ◊.

■ Always select this setting if:

- A large amount of food is being stored in the drawer
- Different types of food are being stored in the drawer
- Most of the food being stored in the drawer is fruit
- The humidity level in the DailyFresh drawer is too high.

Selecting increased humidity ◊◊

■ Slide the controller to the left.

The compartment lid is closed and the humidity remains in the compartment ◊◊.

■ Select this setting if:

- A small amount of food is being stored in the drawer
- Most of the food being stored in the drawer is vegetables
- The humidity level in the DailyFresh drawer is too low.

Increased moisture in the DailyFresh drawer can, in some circumstances, cause a build-up of condensate.

If you find that too much condensate has formed and this is affecting the food, proceed as follows:

Wipe off any condensate with a cleaning cloth.

Open the compartment lid by moving it to the low humidity ◊ position.

Storing food in the DailyFresh zone

Observe the following tips if you find that food you have stored does not keep well (e.g. food becomes limp or wilts after only being stored for a short time):

- Only place fresh food in the appliance. The initial condition of the food is crucial to maintaining freshness.
- Clean the DailyFresh drawer before storing food in it.
- Very wet food should be dried off before storing it.
- Do not store food which is sensitive to cold in the DailyFresh drawer (see “Storing food in the refrigerator section – Food which is not suitable for storage in the refrigerator section”).
- Set the compartment cover to the correct position for the food being stored (humidity not increased ◊ or humidity increased ◊◊).
- An increased humidity level ◊◊ in the humidity-controlled compartment is achieved with the moisture present in the food being stored if it is stored unwrapped. The more food stored in the compartment, the higher the humidity.
- If too much moisture collects in the compartment at the ◊◊ setting and the food is affected, dry the base and place a rack or similar item in the compartment so that excess moisture can drip down. Alternatively, reduce the humidity ◊ by sliding the control to the right.
- If the humidity level is too low despite the ◊◊ setting, wrap the food in airtight packaging.

Maximum freezing capacity

To ensure that fresh food placed in the freezer freezes through to the core as quickly as possible, the maximum freezing capacity must not be exceeded. The maximum freezing capacity for freezing within a 24-hour period is given on the data plate: “Freezing capacity ... kg/ 24 hrs”.

Before placing food in the freezer

- When freezing more than 2 kg of fresh food, switch on the Party mode function ❄ for approx. 24 hours before placing the food in the freezer (see “Using Party mode (SuperCool/SuperFreeze)”).

This helps the frozen food which is already stored in the freezer to stay frozen.

- Only freeze fresh food which is in good condition.

Please note that some food is not suitable for freezing. This includes, for example, vegetables that are usually eaten raw, such as lettuce or radishes.

Tip: To retain colour, taste, aroma and vitamin C, vegetables should be blanched before they are frozen. To do so, place vegetables portion by portion into boiling water for 2–3 minutes. Then remove and plunge the vegetables into ice-cold water to cool quickly. Leave the vegetables to drain.

Placing frozen food in the freezer

Unfrozen food should not touch frozen food as this will cause the frozen food to begin to thaw.

If the ventilation slots are blocked, the cooling performance will decrease and energy consumption will increase.

When placing food in the freezer, make sure that the ventilation slots are not blocked.

- To prevent food sticking together when frozen, make sure that the packaging and containers are dry.
- Fill the top freezer drawer with food first. This is where food freezes the quickest.
- Always place the food as close as possible to the drawer walls so that it freezes through to the core as quickly as possible.
- Then transfer to freezer bags or containers and place in the other freezer drawers.

Always push in the freezer drawer as far as it will go to allow the air to circulate freely in the refrigeration appliance.

The freezing process is complete **approx. 24 hours after placing food in the freezer**.

– VarioRoom: freezing the maximum amount of food (see data plate)

Tip: You can expand the space available in the freezer section. If you wish to freeze large items such as a turkey or game, the freezer drawers can be removed.

- Remove the upper freezer drawers and place the food in the freezer drawer below or directly on the base of the freezer section.

Once frozen:

- Switch off the Party mode function ❄.
- Place the frozen food flat in the freezer drawers.
- Place the freezer drawers back in the refrigeration appliance by pushing the guide into the holder on the left and right.

Cooling drinks quickly

When cooling drinks quickly in the freezer, make sure bottles are **not left in for more than one hour**; otherwise they could burst, causing injury and damage.

Making ice cubes

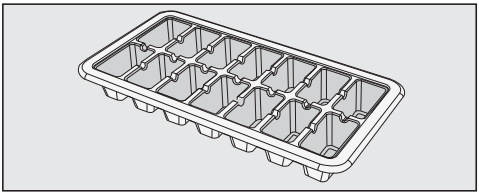

- Fill the ice cube tray 3/4 full with water and place it on the bottom of one of the freezer drawers.
- Once frozen, use a blunt instrument, for example a spoon handle, to remove the ice tray from the freezer if it is stuck.

Tip: Ice cubes can be removed easily from the tray by twisting the tray gently or by holding it under cold running water for a short time.

The data plate located inside the interior cabinet of the refrigeration appliance must not be removed. It contains information which is required in the event of a service call.

Do not let water get into the electronic unit or the lighting.

⚠ Risk of damage due to moisture ingress.
The steam from a steam cleaner can damage plastic and electrical components.
Do not use a steam cleaner to clean the refrigeration appliance.

Cleaning agents

Cleaning and conditioning agents used in the interior cabinet of the refrigeration appliance must be food safe.

To avoid damaging the surfaces of the appliance, **do not use the following:**

- Cleaning agents containing soda, ammonia, acids or chlorides
- Cleaning agents containing descaling agents
- Abrasive cleaning agents (e.g. scouring powder, scouring liquid or pumice stones)
- Cleaning agents containing solvents
- Stainless steel cleaners
- Dishwasher cleaner
- Oven sprays
- Glass cleaning agents
- Hard, abrasive sponges and brushes (e.g. pot scourers)
- Eraser stain remover blocks
- Sharp metal scrapers

We recommend using a clean sponge and lukewarm water with a little washing-up liquid to clean the surfaces of the appliance.

Preparing the refrigeration appliance for cleaning

- Switch the refrigeration appliance off.
- Take any food out of the refrigeration appliance and store it in a cool place.
- Take out any removable parts for cleaning.

Cleaning the inside of the appliance

Clean the refrigeration appliance regularly, or at least once a month.

If soiling is left on for any length of time, it may become impossible to remove under certain circumstances.
Surfaces may suffer discolouration or damage.
It is therefore best to remove any soiling immediately.

- Clean the **interior** with a clean sponge, lukewarm water and a little washing-up liquid.
- Rinse all parts by hand. Do not wash in a dishwasher.
- After cleaning, wipe with clean water and dry with a soft cloth.

- Clean the condensate channel and drain hole frequently using a cotton swab or similar item to ensure that condensate can drain away freely.
- Leave the door open to air the refrigeration appliance sufficiently for a short while and to prevent odour build-up.

Removing and dismantling accessories for cleaning

Dismantling the door shelf/bottle shelf

To remove the stainless steel trim, proceed as follows:

- Place the door shelf/bottle shelf on the worktop.
- Pull the trim off the shelf, beginning at one side.
- After cleaning the door shelf/bottle shelf, reattach the trim.

Dismantling an adjustable shelf

- Place the shelf on a worktop covered with a soft material (e.g. a tea towel).

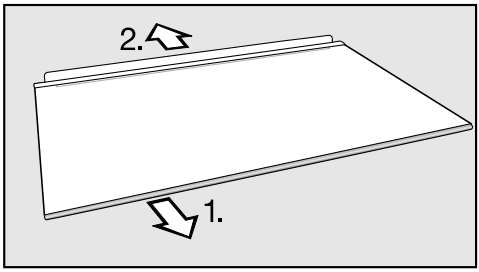

- Before cleaning the shelf, remove the trim and protective strip at the back of the shelf as follows:

1. Pull the trim off the shelf, beginning at one side.
2. Pull off the rear protective strip.

- After cleaning the shelf, reattach the trim and the protective strip at the back of the shelf.

Removing a drawer

- Lift the drawer slightly at the front and pull it out.

Removing the compartment cover on the DailyFresh drawer

- Remove the DailyFresh drawer.
- Lift the compartment cover at the front and pull it out.
- After cleaning, slide the compartment cover back in again.

Cleaning the door seal

⚠ Risk of damage as a result of incorrect cleaning.
If you treat the door seal with oils or grease, it can become porous.
Do not use any oils or grease on the door seal.

- The door seal should be cleaned regularly with clean water, and then wiped dry with a soft cloth.

Cleaning the ventilation gaps

A build-up of dust will increase the energy consumption of the appliance.

- The ventilation gaps should be cleaned on a regular basis with a brush or vacuum cleaner (you could use a Miele vacuum cleaner dusting brush, for example).

After cleaning

- Replace all shelves and accessories in the refrigeration appliance.
- Switch the refrigeration appliance on.
- Switch on the Party mode function ❄ for a while so that the refrigerator section and freezer section can cool down quickly.
- Place food in the refrigerator section and close the appliance door.
- Once the freezer section has reached the required temperature, place the frozen food back in the freezer drawers and put them back in the freezer section.
- Switch the Party mode function ❄ off as soon as the temperature in the freezer is a constant -18 °C or colder.

Defrosting

The refrigerator section defrosts automatically.

Condensate and frost can build up on the back wall of the refrigerator section whilst the compressor is running. You do not need to remove this.

The condensate drains through a channel and drain hole into an evaporation system at the back of the refrigeration appliance. The warmth generated by the compressor causes the condensate to evaporate automatically.

Keep the condensate channel and the condensate drain hole clean. Condensate must be able to drain away unhindered at all times.

Freezer zone

The refrigeration appliance is equipped with a NoFrost system that defrosts the freezer zone automatically.

Troubleshooting

Many malfunctions and faults can be easily remedied. You can save time and money in many cases, as you do not need to contact Customer Service.

More information to help you remedy faults yourself can be found at www.miele.co.uk/support/customer-assistance.

To prevent unnecessary loss of temperature it is advisable not to open the door while waiting for the appliance to be serviced.

Other problems

Problem	Cause and remedy
The refrigeration appliance is not cooling.	The refrigeration appliance has not been switched on. ■ Switch the refrigeration appliance on.
	The mains plug is not inserted in the socket correctly or the plug connector is not inserted into the socket at the back of the appliance correctly. ■ Insert the mains plug into the mains socket and the plug connector into the appliance socket correctly and switch on.
	The mains fuse has tripped. There could be a fault with the refrigeration appliance, the household electrical wiring or another electrical appliance. ■ Contact a qualified electrician or the Miele Customer Service Department.

Problem	Cause and remedy
The temperature display lights up but the refrigeration appliance is not cooling.	Demo mode has been activated. This allows the refrigeration appliance to be presented in the dealer showroom without the cooling system being switched on. This setting is not needed for domestic use. ■ Switch off demo mode by running the appliance self-test: ■ Switch the refrigeration appliance off. ■ Disconnect the power supply. ■ After 5 minutes, reconnect the refrigeration appliance to the mains and switch it back on. ■ Within the following 10 seconds, touch the sensor control for 3–5 seconds until an acoustic signal sounds. The self-test starts. - If 2 acoustic signals sound at the end of the self-test and the temperature display shows the set temperature, your refrigeration appliance is ready for operation. - The refrigeration appliance reverts to normal operation. - If 5 acoustic signals sound at the end of the self-test and the temperature display LEDs light up with varying brightness levels, a fault has occurred. Contact the Miele Customer Service Department. The LEDs inform the Customer Service Department about the fault in question.
The compressor is switching on more frequently and for longer periods of time. The temperature in the refrigeration appliance is too low.	The ventilation gaps have been covered or become too dusty. ■ Do not block the ventilation gaps. ■ Dust the ventilation gaps regularly.
	The appliance doors have been opened too frequently, or a large amount of fresh food has been put in all at once for storage or freezing. ■ Only open the appliance doors when necessary and for as short a time as possible. After a while, the temperature will return to normal by itself.
	The appliance doors are not closed properly. A thick layer of ice may have formed in the freezer section.

Problem	Cause and remedy
	■ Close the appliance doors. After a while, the temperature will return to normal by itself. If a thick layer of ice has already formed, this will affect cooling and increase energy consumption. ■ Defrost the refrigeration appliance and clean it.
	The ambient temperature is too high. The higher the ambient temperature, the longer the compressor runs. ■ See the information in “Installation – Installation site”.
	The refrigeration appliance was not properly installed in the niche. ■ Install the refrigeration appliance in the niche as described in the installation instructions supplied with it.
	The temperature setting in the refrigeration appliance is too low. ■ Correct the temperature setting.
	A large amount of food is being frozen at once. ■ See “Freezing and storing food”.
	The Party mode function ❄ is still switched on. ■ Switch off the Party mode function ❄ earlier to save energy.
The temperature in the refrigeration appliance is too high. The frozen food (depending on the model) could defrost.	This is not a fault. The temperature setting is too high. ■ Correct the temperature setting. ■ Check the temperature again after 24 hours.
	The ambient temperature is too low for this refrigeration appliance. If the ambient temperature is too low, the compressor will run less frequently. The temperature in the refrigeration appliance is rising. ■ See the information in “Installation – Installation site”. ■ Increase the ambient temperature.

Problem	Cause and remedy
The sensor control for setting the temperature lights up until the temperature display flashes. An alarm tone sounds.	The fan in the freezer section has failed. ■ Touch the sensor control. ■ The alarm tone will stop. The set temperature appears in the display again. ■ Contact the Miele Customer Service Department.
An alarm sounds.	The appliance doors have been open for longer than approx. 2 minutes. ■ Close the appliance doors.
Food has frozen together.	The food packaging was not dry when placed in the freezer. ■ Use a blunt instrument, e.g. a spoon handle or plastic scraper, to prise it apart carefully.
The area around the freezer section feels warm.	This is not a fault. The heater prevents condensation around the door seal.
The door to the freezer will not open because it has been opened and closed too many times in succession.	This is not a fault. The suction caused by opening and closing the door is preventing the door from opening. Wait approx. 1 minute and then try again. It should now open without force.
Heavy build-up of ice on the rear wall of the refrigerator section	The shelf in the refrigerator section has not been fitted correctly. ■ Fit the shelf correctly. The rear edge must face upwards.
All LEDs in the temperature display light up.	The temperature sensor is reports a fault. ■ Contact the Miele Customer Service Department. ■ If the alarm tone annoys you, it can be turned off early. Touch the sensor control.

Problem	Cause and remedy
There was a power cut.	The temperature in the refrigeration appliance rises during a power cut. The storage time is reduced and the quality of your food is impaired. ■ Keep the refrigeration appliance closed during a power cut if possible and do not store any more food inside it. ■ Check the quality of the food after the power cut. ■ Depending on the temperature displayed, you should check whether food in the freezer has started to thaw or has defrosted. If it has, it should be used as soon as possible. Defrosted food may only be re-frozen after it has been cooked. ■ If in doubt, dispose of food that has defrosted.

The interior lighting is not working.

Problem	Cause and remedy
The interior lighting is not working.	The refrigeration appliance has not been switched on. ■ Switch the refrigeration appliance on.
	To avoid overheating, the lighting switches itself off automatically after approx. 15 minutes if the appliance door is left open. If this is not the case, then there is a fault. ⚠ Risk of electric shock due to exposed, live electrical components. When removing the lighting cover, there is a risk of coming into contact with live electrical components. Do not remove the lighting cover. The LED lighting may only be repaired or replaced by the Miele Customer Service Department. ⚠ Risk of injury from LED lighting. This lighting corresponds to risk group RG 2. If the cover is defective, there is a danger of eye injury. If the lighting cover is defective, do not look from a close range directly into the lighting with optical instruments (e.g. magnifying glass or similar). ■ Call the Miele Customer Service Department.

Noises

The refrigeration appliance is producing various noises during operation.
If the cooling performance is low, the refrigeration appliance will conserve energy but operate for longer. The volume will be lower.
Food will be chilled faster if the cooling performance is high.
The volume will be higher.

Normal noises	What is causing the noises?
Hissing	Refrigerant is being injected into the cooling circuit.
Bubbling, gurgling, splashing	Refrigerant is circulating through the pipes.
Humming	The refrigeration appliance is cooling.
Clicking	The thermostat is switching the compressor on or off.
Humming, whirring	The fan is running. The automatic door opener (depending on the model) is opening or closing the appliance door.
Cracking	Material in the refrigeration appliance is expanding.
Rattling	Valves or flaps are active.
Buzzing (refrigeration appliances with water container)	Water is being pumped out of the water container.
Slurping (refrigeration appliances with soft-close mechanism)	The appliance door with soft-close mechanism is being opened or closed.
Please bear in mind that a certain amount of noise is unavoidable (from the compressor and the refrigerant circulating through the cooling circuit).	

Troubleshooting

Noises	Cause and remedy
Vibrating, rattling, clinking	The refrigeration appliance is uneven. Use a level to check and adjust the alignment of the refrigeration appliance. The refrigeration appliance is aligned by raising or lowering the adjustable feet (depending on the model) underneath it. **For built-in appliances**: For niches of 140 cm and more: place the stabilising rods supplied underneath the appliance base.
	The refrigeration appliance is touching another appliance or piece of furniture. Move it away.
	Drawers, baskets or shelves are jiggling or are stuck. Check all removable items and refit them correctly.
	Bottles or containers are touching. Separate bottles or containers slightly.
	The transport cable clips (depending on the model) are hanging loose at the back of the appliance. Remove the transport cable clips.

Information to help you rectify faults yourself and about Miele spare parts can be found at www.miele.com/service.

Contact in the event of a fault

In the event of a fault which you cannot remedy yourself, please contact your Miele dealer or Miele Customer Service.

You can book a Miele Customer Service call-out online at www.miele.com/service.

Contact information for Miele Customer Service can be found at the end of this document.

Please quote the model identifier and serial number of your appliance (SN) when contacting Miele Customer Service. Both numbers can be found on the data plate inside the refrigeration appliance or, depending on the model, in Settings mode under Information ℹ.

The data plate can be found in the interior cabinet of the refrigeration appliance.

EPREL database

Since 1 March 2021, information on energy labelling and ecodesign requirements has been available in the European Product Database (EPREL). You can find the product database at the following link https://eprel.ec.europa.eu/. You will be asked to enter the model identifier.

The model identifier can be found on the data plate inside the refrigeration appliance or, depending on the model, in Settings mode under Information ℹ.

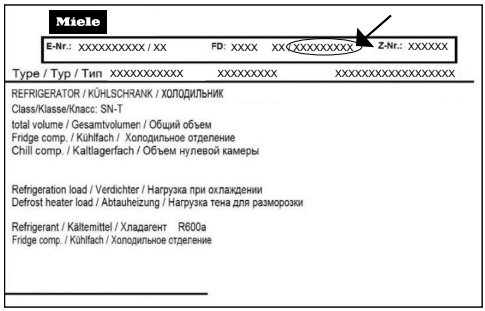

Warranty

For information on the appliance warranty specific to your country please contact Miele. See back cover for address.

In the UK, your appliance warranty is valid for 2 years from the date of purchase. However, you must activate your cover by calling 0330 160 6640 or registering online at www.miele.co.uk.

United Kingdom
Miele Co. Ltd., Fairacres, Marcham Road, Abingdon, Oxon, OX14 1TW
Tel: 0330 160 6600, Internet: www.miele.co.uk, E-mail: info@miele.co.uk

Australia
Miele Australia Pty. Ltd.
ACN 005 635 398
ABN 96 005 635 398
Level 4, 141 Camberwell Road
Hawthorn East, VIC 3123
Tel: 1300 464 353
E-mail: info@miele.com.au
Internet: www.miele.com.au

China Mainland
Miele Electrical Appliances Co. Ltd.
No. 82, Shimenyi Road, JingAn District
Shanghai, China, P.R.C
Post Code: 200040
Phone: +86 21 6157 3500
Fax: +86 21 6157 3511
E-mail: info@miele.cn
Internet: www.miele.cn

Hong Kong, China
Miele (Hong Kong) Ltd.
41/F - 4101, Manhattan Place
23 Wang Tai Road
Kowloon Bay, Hong Kong
Tel: (852) 2610 1025
Fax: (852) 3579 1404
E-mail:
customerservices@miele.com.hk
Website: www.miele.hk

India
Miele India Pvt. Ltd.
1st Floor, Copia Corporate Suites,
Commercial Plot 9, Mathura Road,
Jasola, New Delhi - 110025
E-mail: customercare@miele.in
Website: www.miele.in

Ireland
Miele Ireland Ltd.
2024 Bianconi Avenue
Citywest Business Campus
Dublin 24
Tel: (01) 461 07 10
Fax: (01) 461 07 97
E-mail: info@miele.ie
Internet: www.miele.ie

Malaysia
Miele Sdn Bhd
Suite 12-2, Level 12
Menara Sapura Kencana
Petroleum
Solaris Dutamas No. 1
Jalan Dutamas 1
50480 Kuala Lumpur, Malaysia
Phone: +603-6209-0288
Fax: +603-6205-3768

New Zealand
Miele New Zealand Limited
IRD 98 463 631
8 College Hill
Freemans Bay, Auckland 1011
Tel: 0800 464 353
E-mail: customercare@miele.co.nz
Internet: www.miele.co.nz

Singapore
Miele Pte. Ltd.
29 Media Circle
#11-04 ALICE@Mediapolis
Singapore 138565
Tel: +65 6735 1191
Fax: +65 6735 1161
E-mail: info@miele.com.sg
Internet: www.miele.sg

South Africa
Miele (Pty) Ltd.
63 Peter Place, Bryanston 2194
P.O. Box 69434, Bryanston 2021
Tel: (011) 875 9000
Fax: (011) 875 9035
E-mail: info@miele.co.za
Internet: www.miele.co.za

Thailand
Miele Appliances Ltd.
BHIRAJ TOWER at EmQuartier
43rd Floor Unit 4301-4303
689 Sukhumvit Road
North Klongton Sub-District
Vadhana District
Bangkok 10110, Thailand

United Arab Emirates
Miele Appliances Ltd.
Showroom 1, Eiffel 1 Building
Sheikh Zayed Road, Umm Al Sheif
P.O. Box 114782 - Dubai
Tel. +971 4 3044 999
Fax. +971 4 3418 852
800-MIELE (64353)
E-mail: info@miele.ae
Website: www.miele.ae

Manufacturer: Miele & Cie. KG, Carl-Miele-Straße 29, 33332 Gütersloh, Germany

Miele

KDN 7713 E, KDN 7714 E, KDN 7724 E

en-GB

M.-Nr. 12 126 540 / 01 / 002