Operating and installation instructions
Wine conditioning unit



To avoid the risk of accidents or damage to the appliance it is **essential** to read these instructions before it is installed and used for the first time.

en - GB

M.-Nr. 09 875 620

Contents

Guide to the appliance 4
Door catch 7
To open the door 7
To close the door 7
Accessories 8
Caring for the environment 9
Warning and Safety instructions 10
How to save energy 18
Switching on and off 19
Before using for the first time 19
Operating the appliance 19
Switching on 19
Switching off 20
Switching off for longer periods of time 20
Selecting further settings 21
Safety lock 21
Audible tones 22
Display brightness 23
Temperature and air quality 24
Temperature 24
Setting the temperature 25
Temperature range 26
Temperature display 26
Air quality and humidity 27
Dynamic cooling (constant air humidity) 27
Air filtering with active charcoal filter 28
Temperature and door alarm 29
Feature lighting 31
Switching the feature lighting on and off 31
Setting the brightness of the feature lighting 31
Lighting duration of the feature lighting 32
Storing wine bottles 33
Wooden shelves 33
Moving the wooden shelves 34
Adjusting the wooden shelves 35
Annotating wooden shelves 35
Rack 36

Contents

Maximum capacity . . . 36
Automatic defrosting . . . 37
Cleaning and care . . . 38
Cleaning the door, the interior and accessories . . . 39
Ventilation gaps . . . 40
Door seal . . . 40
Air filter . . . 40
Active charcoal filter . . . 41
To change the active charcoal filter . . . 41
Problem solving guide . . . 43
Noises . . . 48
Miele@home . . . 49
After Sales / Guarantee . . . 51
Guarantee: U.K. . . . 51
Guarantee: Other countries . . . 51
Information for test institutes . . . 52
Information for dealers . . . 53
Demo mode . . . 53
Electrical connection . . . 55
Installation . . . 56
Side-by-side installation . . . 56
Location . . . 56
Climate range . . . 57
Ventilation . . . 57
Before installing the appliance . . . 58
Door opening angle limiter . . . 58
Appliance dimensions . . . 59
Changing the door hinging . . . 60
Under-counter installation . . . 64
Preparing the appliance . . . 64
Aligning the appliance to taller furniture doors . . . 67
Push the appliance into the niche . . . 68
Securing the appliance in the niche . . . 69
Adjusting the lateral alignment of the appliance door . . . 70
Addresses . . . 75

Guide to the appliance

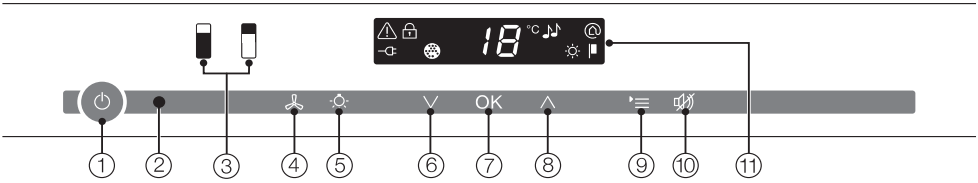

① On/Off sensor for the whole appliance

② Optical interface (for Service technicians only)

③ Sensor for selecting the upper or lower wine conditioning zone

④ On/Off sensor for the Dynamic cooling function (constant humidity)

⑤ On/Off sensor for the feature lighting

⑥ ∨ sensor for setting a lower temperature

⑦ OK sensor for confirming a selection

⑧ ∧ sensor for setting a higher temperature

⑨ Sensor for accessing or leaving settings mode

⑩ Sensor for switching off the temperature or door alarm

⑪ Display with temperature and symbols (symbols only visible in settings mode; see table for explanation of symbols)

Symbols in settings mode:

Symbol	Meaning	Function
	Safety lock	To prevent inadvertent switching off and altering of settings
	Audible tones	For switching on and off keypad tones and the door alarm if it has been activated
	Miele@home	Only visible when a communication module is fitted and signed on (see "Miele@home")
	Demo mode (only visible when Demo mode is active)	For switching off Demo mode
	Display brightness	For adjusting the brightness of the display
	Active charcoal filter	Lights up when the active charcoal filter needs changing
	Mains connection (only visible when appliance is switched off or in case of a power failure)	Confirms that the appliance is connected to the mains electrical supply; flashes in the case of a power failure
	Alarm (only visible when the temperature or door alarm is sounding)	Indicates a door or temperature alarm

Guide to the appliance

① Push2open door release

② Lighting strip
(in both wine conditioning zones)

③ Active charcoal filter

④ Control panel for the upper and lower Wine conditioning zones/Isolator
plate for thermal separation of the zones

⑤ Isolator strips for thermal separation of the zones

⑥ Wooden shelves with labels (FlexiFrames with Noteboard)

⑦ Rack

⑧ Safety glass door with UV filter

⑨ Ventilation grille with air filter

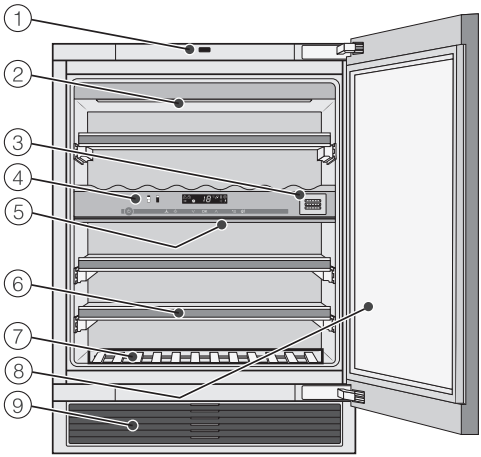

The Push2open door catch on your appliance makes it easy to open the door.
The appliance door is sensitive to pressure.

To open the door

- Push briefly against the door.
- Then let go.
  The door will open a little by itself.
- Open the door fully, e.g. to take out a bottle of wine.

To protect against inadvertent opening:
if you do not open the door wider, it will close again by itself after approx. 3 seconds.

To close the door

- Push the door shut.

To avoid damage to the door catch:
- do not obstruct the door whilst it is opening.
- do not push in or hold onto the door catch whilst the door is closing.

Accessories

Accessories supplied

Active charcoal filter

The active charcoal filter achieves optimum air quality by filtering the incoming air.

Air filter

The air filter behind the ventilation grille protects the cooling system from dust.

Chalk

Use the chalk to annotate the magnetic strips on the wooden shelves to identify your wines quickly and easily.

Optional accessories

Active charcoal filter

(See "Accessories supplied")

Air filter

(See "Accessories supplied")

Chalk

(See "Accessories supplied")

Stainless steel care

– Stainless steel conditioner (in a bottle) forms a waterproof protective film which helps prevent re-soiling and resists fingerprints and other dirt.

– The stainless steel cloth is impregnated with stainless steel conditioner for optimum cleaning and protection.

Multi-purpose microfibre cloth

The microfibre cloth is suitable for removing fingerprints and light soiling from surfaces such as stainless steel, glass, plastic and chrome without the use of chemicals.

Optional accessories are available from Miele or via the internet.



Disposing of the packaging materials

The packaging is designed to protect the appliance from damage during transportation. The packaging materials used are selected from materials which are environmentally friendly for disposal and should be recycled.

Recycling the packaging reduces the use of raw materials in the manufacturing process and also reduces the amount of waste in landfill sites.

Disposing of your old appliance

Electrical and electronic appliances often contain valuable materials. They also contain materials which, if handled or disposed of incorrectly, could be potentially hazardous to human health and to the environment. They are, however, essential for the correct functioning of your appliance. Please do not therefore dispose of it with your household waste.

Please dispose of it at your local community waste collection / recycling centre.

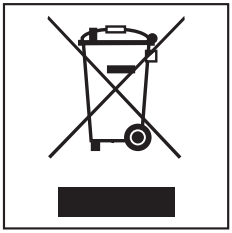

Take care not to damage the pipework at the back of it before or during transportation to an authorised collection depot. In this way, refrigerant in the pipework and oil in the compressor will be contained, and will not leak into the environment.

Please ensure that your old appliance presents no danger to children while being stored awaiting disposal. See "Warning and Safety instructions" for more information.

This appliance complies with all statutory safety requirements. Please note that inappropriate use can lead to personal injury and damage to property.

To avoid the risk of accidents and damage to the appliance, please read these instructions carefully before using it for the first time. They contain important notes on installation, safety, use and maintenance.

Miele cannot be held liable for non-compliance with these instructions.

Keep these instructions in a safe place and ensure that new users are familiar with the contents. Pass them on to any future owner.

⚠ Danger of injury
At altitudes above 1500 m there is a risk of the glass door shattering!
Shards of glass can cause injury!

Correct application

▶ This appliance is intended for use in domestic households and similar working and residential environments.
It is not intended for outdoor use.

▶ This appliance is intended for domestic use only for storing wine. Any other usage is not supported by the manufacturer and could be dangerous. The manufacturer cannot be held liable for damage resulting from incorrect or improper use or operation.

▶ This appliance is not suitable for storing and keeping cool medicines, blood plasma, laboratory preparations or other such materials or products. Incorrect use of the appliance for such purposes can cause deterioration of the items stored. The appliance is not suitable for use in areas where there is a risk of explosion. Miele cannot be held liable for damage resulting from improper or incorrect use of the appliance.

▶ The appliance can only be used by people with reduced physical, sensory or mental capabilities, or lack of experience and knowledge, if they are supervised whilst using it, or have been shown how to use it in a safe way and recognise and understand the consequences of incorrect operation.

Safety with children

▶ Children under 8 years of age must be kept away from the appliance unless they are constantly supervised.

▶ Children 8 years and older may only use the appliance unsupervised if they have been shown how to use it in a safe way and recognise and understand the consequences of incorrect operation.

▶ Children must not be allowed to clean or maintain the appliance unsupervised.

▶ Please supervise children in the vicinity of the appliance and do not let them play with it.

▶ Danger of suffocation. Packaging, e.g. plastic wrappings, must be kept out of the reach of babies and children. Whilst playing, children could become entangled in packaging or pull it over their head and suffocate.

Technical safety

▶ The coolant system is tested for leaks. This appliance complies with statutory safety requirements and the appropriate EU guidelines.

▶ This appliance contains the coolant Isobutane (R600a), a natural gas which is environmentally friendly. Although it is flammable, it does not damage the ozone layer and does not increase the greenhouse effect.
The use of this coolant has, however, led to a slight increase in the noise level of the appliance. In addition to the noise of the compressor, you might be able to hear the coolant flowing around the system. This is unavoidable, and does not have any adverse effect on the performance of the appliance.
Care must be taken during the transportation and setting up of the appliance that no parts of the cooling system are damaged. Leaking refrigerant can damage the eyes.
In the event of any damage:

– avoid naked flames or anything which creates a spark,
– disconnect the appliance from the mains electricity supply,
– ventilate the room where the appliance is located for several minutes, and
– call Miele.

▶ The more coolant there is in an appliance, the larger the room it should be installed in. In the event of a leakage, if the appliance is in a small room, there is the danger of combustible gases building up. For every 8 g of coolant at least 1 m^3 of room space is required. The amount of coolant in the appliance is stated on the data plate inside the appliance.

▶ To avoid the risk of damage to the appliance, make sure that the connection data (fuse rating, frequency and voltage) on the data plate corresponds to the household supply.
Check that this is the case before connecting the appliance. Consult a qualified electrician if in any doubt.

▶ The electrical safety of this appliance can only be guaranteed when correctly earthed. It is essential that this standard safety requirement is met. If in any doubt please have the electrical installation tested by a qualified electrician.

▶ If the electrical connection cable is faulty it must only be replaced by a Miele authorised service technician to protect the user from danger.

▶ Do not connect the appliance to the mains electrical supply by a multi-socket adapter or extension lead. These are a fire hazard and do not guarantee the required safety of the appliance.

▶ Do not use in a damp or wet environment (e.g. garage or utility room).
Moisture could reach live components or the electrical connection and cause a short circuit.

▶ This appliance must not be used in a non-stationary location (e.g. on a ship).

▶ Do not use a damaged appliance. It could be dangerous. Check the appliance for visible signs of damage.

▶ For safety reasons, this appliance may only be used when it has been fully installed.

▶ The appliance must be isolated from the electricity supply during installation, maintenance and repair work.

▶ Unauthorised installation, maintenance and repairs can cause considerable danger for the user. Installation, maintenance and repairs must only be carried out by a Miele authorised technician.

▶ While the appliance is under guarantee, repairs should only be undertaken by a Miele authorised service technician. Otherwise the guarantee is invalidated.

▶ Miele can only guarantee the safety of the appliance when genuine original Miele replacement parts are used. Faulty components must only be replaced by Miele spare parts.

Correct use

▶ The appliance is designed for use within a certain climate range (ambient temperatures), and should not be used outside this range. The climate range for your appliance is stated on the data plate inside the appliance.
Installing it in a room with too low an ambient temperature, e.g. a garage, will lead to the appliance switching off for longer periods so that it cannot maintain the required temperature.

▶ Do not cover or block the air vents as this could impair the efficiency of the appliance, increase the electricity consumption and could cause damage to the components.

▶ If storing food which contains a lot of fat or oil in the appliance, make sure that it does not come into contact with plastic components as this could cause stress cracks or break the plastic.

▶ Do not store explosive materials in the appliance or any products containing propellants (e.g. spray cans). Electrical components could cause flammable vapours to ignite. Danger of fire and explosion.

▶ Do not operate any electrical equipment (e.g. an electric ice cream maker) inside the appliance. Danger of sparking and explosion.

▶ Only use genuine original Miele accessories with this appliance. Using spare parts or accessories from other manufacturers will invalidate the guarantee, and Miele cannot accept liability.

Cleaning and care

▶ Do not use any oils or grease on the door seals, as these will cause the seals to deteriorate and become porous with time.

▶ Do not use a steam cleaning appliance to clean or defrost this appliance.
Steam could reach electrical components and cause a short circuit.

▶ Do not use sharp edged objects to
– remove frost and ice,
– separate frozen foods or remove ice trays.

They will damage the evaporator, causing irreversible damage to the appliance.

▶ Do not place electric heaters or candles in the appliance to defrost it. These can damage the plastic parts.

▶ Do not use defrosting sprays or de-icers, as they could contain substances which could damage the plastic parts or which might cause the build-up of gases and pose a danger to health.

Transporting the appliance

▶ Always transport the appliance in an upright position and in its original transport packaging to avoid damage in transit.

▶ Danger of injury and damage. The appliance is very heavy and must be transported by two people.

Disposal of your old appliance

▶ Before disposing of an old appliance, first make the door latch or lock unusable.
This way you will prevent children from accidentally locking themselves in and endangering their lives.

▶ Be careful not to damage any part of the pipework whilst awaiting disposal, e.g. by

– puncturing the coolant channels in the condenser,

– bending any pipework, or

– scratching the surface coating.

Splashes of coolant can damage the eyes.

How to save energy

	Normal energy consumption	Increased energy consumption
Installation site/ maintenance	In a ventilated room.	In an enclosed, unventilated room.
	Protected from direct sunlight.	In direct sunlight.
	Not near to a heat source (radiator, oven).	Near to a heat source (radiator, oven).
	Where the ideal ambient room temperature is approx. 20°C.	Where there is a high ambient room temperature.
	Ventilation gaps uncovered and dusted regularly.	Ventilation gaps covered or dusty.
	Remove and clean the air filter with a vacuum cleaner at least once a year.	If dust has accumulated on the air filter.
Temperature setting	10 to 12 °C	The lower or higher the temperature set, the higher the energy consumption.
Use	Wooden shelves arranged as they were when the appliance was delivered	
	Only open the door when necessary and for as short a time as possible. Store wine bottles in an organised way.	Frequent opening of the door for long periods will cause a loss of coldness. The appliance works harder to cool down and the compressor runs for longer periods.
	Do not over-fill the appliance to allow air to circulate.	

Before using for the first time

Packaging material

- Remove all packaging material from the inside of the appliance.

Protective foil

Stainless steel surfaces have a layer of protective foil to prevent scratching during transportation.

- Do not remove the foil until the appliance has been positioned in its final location. Start at one of the top corners.

Cleaning and care

It is essential to follow the relevant instructions in "Cleaning and care".

- Clean the inside of the appliance and the accessories with lukewarm water and a little washing-up liquid, and then dry with a soft cloth.

Operating the appliance

A light touch of the finger on the sensors is all that is required to operate this appliance.

A tone will sound each time a sensor is touched. You can deactivate this, if you wish (see "Selecting further settings - Audible tones").

Switching on

The mains connection symbol ⏚ will appear in the display as soon as the appliance has been switched on at the mains.



- Touch the On/Off sensor.

The mains connection symbol ⏚ will then go out the appliance will start to cool.

The sensors for the upper and the lower wine conditioning zones will then appear in the control panel. The selected zone will be highlighted yellow and the temperature of the selected zone will show in the display.
The first time the appliance is switched on the sensors for the wine conditioning zones and the Alarm symbol ⚠ will flash until the selected temperature has been reached in the zones.

As soon as the set temperature has been reached, the sensor for the respective wine conditioning zone will light up constantly. the alarm symbol ⚠ will go out as soon as the set temperatures have been reached in each zone.

The interior lighting will come on when the door is opened.

A different setting can be set for each zone.

- Touch the sensor for the wine conditioning zone you want to adjust the settings for.

The sensor that has been selected is highlighted in yellow.

– You can now set the temperature, and

– switch on the dynamic cooling function.

Please refer to the relevant section for more information.

If you then select the other wine conditioning zone, the settings for the previously selected zone will remain unchanged.

Switching off



- Touch the On/Off sensor.

  If this does not work, the safety lock 🔒 is still activated.

The sensors for the two wine conditioning zones will then go out. The temperature display will go out and the mains connection symbol ⏚ will appear.

The interior lighting will go out and the cooling process will be switched off.

Switching off for longer periods of time

If the appliance is not going to be used for a longer period of time,

- switch the appliance off,
- disconnect it from the mains,
- clean the appliance out and
- leave the door slightly ajar to air the appliance.

If, during a long absence, the appliance is switched off but not cleaned out and the door is left shut, there is a danger of mould and odours building up inside the appliance.

Certain settings on the appliance can only be selected in settings mode.

The door alarm is automatically disabled when the appliance is in settings mode.

Safety lock

The safety lock can be activated to prevent:

- the appliance being switched off by mistake,
- the temperature being changed by mistake,
- Dynamic cooling being switched on by mistake,
- the feature lighting being switched on by mistake.

Activating or deactivating the lock



■ Touch the settings sensor.

All symbols available for selection will appear in the display and the symbol flashes.



■ Touch the OK sensor to confirm your choice.

The last selected setting flashes and the symbol lights up in the display.



■ By touching the ∨ or ∧ sensor, you can now select whether the safety lock is activated or deactivated:
0: the safety lock is deactivated
1: the safety lock is activated



■ Touch the OK sensor to confirm your choice.

The selected setting is applied, the symbol flashes.



■ Touch the settings sensor to leave settings mode.
Otherwise the appliance exits settings mode automatically after approximately one minute.

The symbol will appear in the display when the lock is activated.

Audible tones ♪♪

The appliance has audible tones such as the sensor tone and the door and temperature alarms.

You can switch the sensor tone or the door alarm tone on or off but you cannot deactivate the temperature alarm.

There are four settings to choose from. Option *3* is set the factory, i.e. the sensor tone and the door alarm are switched on.

Switching audible tones on/off



■ Touch the settings sensor.

All symbols available for selection will appear in the display and the ⚿ symbol flashes.



■ Touch the sensors for setting the temperature (∨ or ∧) repeatedly until the ♪♪ symbol flashes.



■ Touch the OK sensor to confirm your choice.

The last selected setting flashes and the ♪♪ symbol lights up in the display.



■ By touching the ∨ or ∧ sensor you can now select:
0: sensor tone off; door alarm off
1: sensor tone off; door alarm on (after 4 minutes)
2: sensor tone off; door alarm on (after 2 minutes)
3: sensor tone on; door alarm on (after 2 minutes)



■ Touch the OK sensor to confirm your choice.

The selected setting is applied, the ♪♪ symbol flashes.



■ Touch the settings sensor to leave settings mode.
Otherwise the appliance exits settings mode automatically after approximately one minute.

Display brightness ☼

The display brightness can be adjusted to suit lighting conditions in the room.

The display brightness can be adjusted in steps from *1* to *3*. The factory default setting is *3* (maximum brightness).

Altering the display brightness



■ Touch the settings sensor.

All symbols available for selection will appear in the display and the 🔒 symbol flashes.



■ Touch the sensors for setting the temperature (∨ or ∧) repeatedly until the ☼ symbol flashes.



■ Touch the OK sensor to confirm your choice.

The last selected setting flashes and the ☼ symbol lights up in the display.



■ By touching the ∨ or ∧ sensor you can now alter the brightness of the display:
1: dimmest setting
2: medium setting
3: brightest setting.



■ Touch the OK sensor to confirm your choice.

The selected setting is applied, the ☼ symbol flashes.



■ Touch the settings sensor to leave settings mode.
Otherwise the appliance exits settings mode automatically after approximately one minute.

Temperature and air quality

Wine keeps on maturing depending on the surrounding conditions. The length of time for which wine can be kept in good condition will therefore depend not only on the temperature but also on the air quality.

The wine conditioning unit with its constant ideal temperature, increased air humidity and odour free atmosphere offers the perfect conditions for storing your wine.

It also guarantees a vibration-free environment so that the maturing process is not disturbed.

Temperature

Wine can be stored at a temperature between 6 °C and 18 °C. If you are storing white and red wines together, select a temperature between 12 °C and 14 °C. This is suitable for both red and white wines.

At too high a temperature (over 22 °C), wine matures too quickly, which prevents the aromas from developing further. Wine cannot mature fully at too low a temperature (below 5 °C).

Fluctuations in temperature put wine under stress and interrupt the maturing process. It is therefore very important to maintain a constant temperature.

Type of wine	**Recommended drinking temperature**
Light, fruity reds:	+14 °C to +16 °C
Full-bodied reds:	+18 °C
Rosé wines:	+8 °C to +10 °C
Delicate, aromatic whites:	+8 °C to +12 °C
Full-bodied or sweet whites:	+12 °C to +14 °C
Champagne, sparkling white wines:	+6 °C to +10 °C

Tip: Store the wine 1 or 2 °C cooler than the recommended drinking temperature as it warms up a little when poured into the glass.

Full-bodied reds should be opened for 2-3 hours before drinking to allow it to breathe and develop its aroma.

Safety device in case of low ambient temperatures

The appliance is equipped with a safety thermostat to protect your wine against a sharp drop in temperature. If the external temperature should drop below this level, a heater element switches on automatically to keep the temperature inside as constant as possible. If the ambient temperature continues to fall, the appliance switches itself off automatically.

Isolator plate for thermal separation

The appliance has a fixed isolator plate which divides the cabinet into two different zones. This enables you to store different types of wine at the same time, e.g. red wine and champagne. The isolation strips on the inside of the glass door prevent an exchange of heat between the individual zones.

Setting the temperature

The temperature can be set in both zones independently of each other.

- Touch the sensor for the zone for which you wish to change the temperature, so that it is highlighted in yellow.

The current temperature for the selected zone appears in the display.

- Set the temperature using the two sensors underneath the display.

By touching the sensor



– the temperature will get colder



– the temperature will get warmer.



- Touch the OK sensor to confirm your choice.

or

- wait approximately 5 seconds after the last press of the sensor.

The temperature being set will flash in the display.

The following information shows in the display when the sensors are touched:

– Touching a sensor once: the **last temperature selected** flashes.
– Each subsequent touch of the sensor:
adjusts the temperature shown in 1 °C steps.
– Leaving a finger on the sensor changes the temperature continuously.

Approximately 5 seconds after the last time a sensor has been touched, the **current** temperature inside the appliance is automatically shown.

When the temperature is altered, there is a short delay until the temperature selected is set.

The temperature display on the control panel always shows the **actual** temperature.

Temperature range

In both zones it is possible to set temperatures between 5 and 20 °C.

Temperature display

In normal operation the temperature display shows the actual temperature in the zone.

If the temperature in one of the zones is not within the range that the appliance is able to display, dashes will light up in the temperature display.

Depending on the ambient temperature and the temperature setting, it can take the appliance a few hours to reach the temperature required and for this temperature to then be shown as a constant temperature in the display.

Air quality and humidity

A conventional refrigerator with its low humidity level is not the best place to store wine. It is very important to store wine in an atmosphere with a high humidity level so that the corks remain moist on the outside. Low humidity causes corks to dry out from the outside, and so do not seal the bottles as tightly. Wine should be stored lying down to keep the corks moist form the inside too. Air entering the bottle will inevitably spoil the wine.

Do not introduce additional moisture into the air, e.g. by placing a dish of water in the appliance, as this will lead to condensation on the interior walls, which can cause corrosion damage.

Dynamic cooling (constant air humidity)

Dynamic cooling raises the relative humidity inside the appliance. Dynamic cooling also distributes the humidity and the temperature evenly around the interior so that you can store all your wine under exactly the same excellent conditions. This will create a stable climate in the cabinet which imitates that of a wine cellar.

Switching on Dynamic cooling

If you would like to use the wine storage unit to store wine long term, we recommend that you keep the Dynamic cooling function switched on.



- Touch the Constant humidity (Dynamic cooling) sensor. It will light up yellow.

Even if Dynamic cooling has not been switched on, the fans in the appliance will come on automatically when the cooling system switches on to ensure your wine is kept in the optimum climate.

The fan automatically switches off when the door is open.

Switching off Dynamic cooling

The appliance uses slightly more energy and is a little noisier when the Dynamic cooling function is switched on. You can switch it off now and then if you wish.



- Touch the Constant humidity (Dynamic cooling) sensor so that it is no longer lit up yellow.

Air filtering with active charcoal filter

The active charcoal filter achieves optimum air quality by filtering the incoming air.

Fresh air from the outside enters the appliance via the active charcoal filter. The Dynamic cooling system then distributes the air evenly throughout the cabinet.
Filtering the incoming air through the active charcoal filter ensures that all the air entering the appliance is fresh and free from dust and smells.
This in turn ensures your wine does not absorb any unwanted odours.

Replace the active charcoal filter regularly. The ⊛ indicator will light up in the display to remind you when to change it (see "Active charcoal filter").

The unit is equipped with an alarm system so that the temperature in both temperature zones cannot rise or fall unnoticed, thus possibly damaging the wine.

Temperature alarm

If the temperature in one of the wine conditioning zones rises or falls by a certain amount, the sensor for that zone will start flashing in the control panel and the alarm symbol ⚠ will start to flash in the display.
An alarm will also sound.

Audible and visual signals will be activated, for example,

– when the appliance is switched on and the temperature in one of the temperature zones differs greatly from the set temperature,

– when too much warm ambient air enters the cabinet when bottles are being rearranged to taken out;

– when a large number of bottles are stored for the first time,

– in the event of a power cut,

As soon as the reason for the alarm has been resolved, the alarm will stop and the alarm symbol ⚠ will go out. The sensor for the relevant zone will light up constantly again.

Switching the alarm off early

If the noise disturbs you, you can switch the alarm off if you wish.



■ Touch the alarm off sensor.

The alarm will stop sounding.
The relevant wine conditioning zone and the alarm symbol ⚠ will continue to flash in the display until the reason for the alarm has been resolved.

Safety device in case of low ambient temperatures

The appliance is equipped with a safety thermostat to protect your wine against a sharp drop in temperature. If the external temperature should drop below this level, a heater element switches on automatically to keep the temperature inside as constant as possible. If the ambient temperature continues to fall, the appliance switches itself off automatically.

Door alarm

An alarm will sound if the door has been left open for longer than 2 minutes. Both wine conditioning zone sensors will flash in the control panel and the alarm symbol ⚠ will light up in the display.

The alarm will stop when you close the door. Both wine conditioning zone sensors and the alarm symbol ⚠ will go out.

Switching the door alarm off early

If the noise disturbs you, you can switch the alarm off if you wish.



■ Touch the alarm off sensor.

The alarm will stop.
Both wine conditioning zone sensors will flash and the alarm symbol ⚠ will light up until you close the door.

If no audible tone sounds even though a door alarm is available, then the audible tone has been switched off in settings mode (see "Selecting further settings - Audible tones").

The interior lighting can be set to remain on when the door is closed so your wines can be on display at all times.

Each zone has its own light so both zones are lit up.

Thanks to the use of LED lighting, the wine will not be adversely affected by heat or UV light.

Switching the feature lighting on and off



- Touch the On/Off sensor for the feature lighting so that it is highlighted in yellow.

The interior lighting is now switched on in both zones, even when the door is closed.

To switch the feature lighting off again:

- Touch the On/Off sensor for the feature lighting so that it is no longer highlighted in yellow.

The interior lighting is now switched off when the door is closed.

Setting the brightness of the feature lighting

The brightness of the feature lighting can be adjusted.



- Touch the On/Off sensor for the feature lighting so that it is highlighted in yellow.
- Touch the On/Off sensor for the feature lighting again (for approx. 4 seconds), until *I* flashes in the display (*h* will start flashing after 2 seconds).
- Use the ∨ and ∧ sensors for altering the temperature to set the feature lighting brightness. Hold the sensors pressed in. The brightness will immediately start to adjust gradually up or down.

By touching the sensor



– the lighting becomes dimmer



– the lighting becomes brighter.



- Touch the OK sensor to confirm your choice.

Feature lighting

The selected brightness is saved for both zones. The temperature reappears in the display.

When the appliance door is closed, the set brightness takes effect. When the appliance door is opened, the interior lighting returns to its normal level.

Lighting duration of the feature lighting

The lighting duration for the feature lighting is set to 30 minutes at the factory.
The lighting duration can be set to 30, 60, 90 minutes, up to 00 (unlimited). The feature lighting will have the brightness setting you have selected previously.

- Open the appliance door.



- Touch the On/Off sensor for the feature lighting so that it is highlighted in yellow.
- Touch the sensor for the feature lighting again (for approx. 2 seconds), until *h* flashes in the display.
- Use the ∨ and ∧ sensors for altering the temperature to set the feature lighting duration. The duration (in minutes) will flash in the display.

By touching the sensor



– lighting duration is reduced by 30 minutes



– lighting duration is increased by 30 minutes.



- Touch the OK sensor to confirm your choice.

The selected lighting duration is saved for both zones. The temperature reappears in the display.

The lighting duration set starts anew whenever the appliance door is opened and closed.

Do not remove the lighting covers. Should the covers be damaged or need to be removed due to damage, **exercise caution**. There are lasers in the lighting (laser beam class 1M) which you should avoid looking at directly. Do not use optical instruments (magnifying glass or similar) to look at the lighting.

Vibration and movement have a negative effect on the maturing process which can affect the taste of the wine.

To avoid disturbing other bottles when removing a bottle of wine, store bottles of the same type beside each other on the same shelf. Avoid stacking bottles on top of one another on the wooden shelves.

Always place the bottles in a horizontal position so that the corks can be kept moist on the inside and air is prevented from getting into the bottles.

Wooden shelves

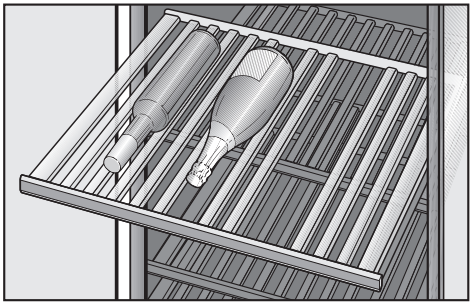

The three wooden shelves are on telescopic runners which can be pulled out to make it easier to store and remove bottles.

Storing wine bottles

Moving the wooden shelves

The wooden shelves can be removed and replaced again if required.

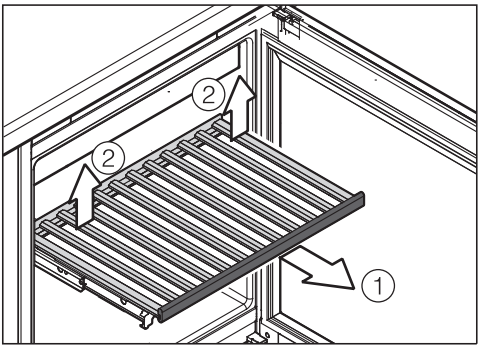

- Pull the wooden shelf out until it stops ①.
- Release the wooden shelf at the back, lifting the shelf on the left and right at the same time. ②.
- Lift the wooden shelf forwards to remove it.

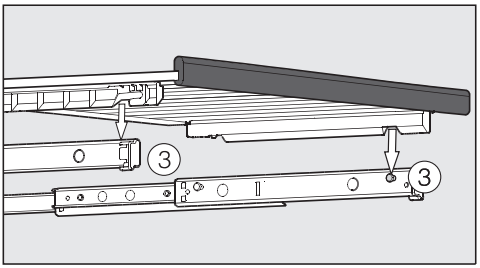

- To replace the shelf, click it into place on the extended runners ③. The notches on the wooden shelf fit into the retaining brackets. The magnetic strip should be pointing forwards.

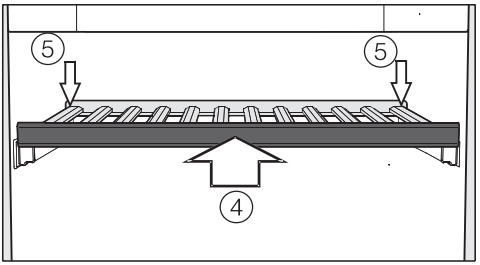

- Slide the wooden shelf back into the appliance as far as it will go ④.
- Push the wooden shelf right back so that it clicks into place at the front.
- Press down on the back of the wooden shelf so that it clicks into place at the back ⑤.

Adjusting the wooden shelves

The slats in the wooden shelves can be individually adjusted to suit, so that every bottle is stored in perfect safety regardless of shape or size.

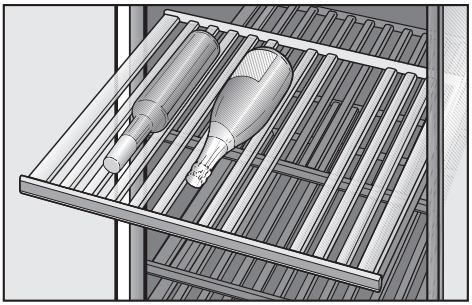

- Simply lift individual slats to move or remove them from the wooden shelves.

Annotating wooden shelves

For quick and easy identification of the wines in storage, you can use the chalk supplied to annotate the magnetic strips on the wooden shelves. You can write directly on the wooden strips or remove them from the wooden shelf to do so:

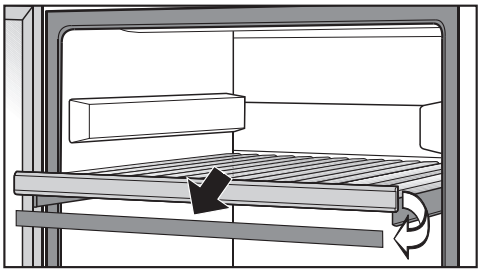

- Hold the magnetic strip by the sides and pull it forwards. The magnetic strip is held on the wooden shelf by magnets.
- Annotate the magnetic strip with the chalk supplied and replace it on the front of the wooden shelf.
- The magnetic strip can be wiped clean with a damp cloth.

Use clear water only to wipe the magnetic strips. **Do not use a cleaning agent** as this would damage the blackboard paint used on the magnetic strips.

Storing wine bottles

Rack

Place the rack at the very bottom of the appliance (see "Description of the appliance").

Maximum capacity

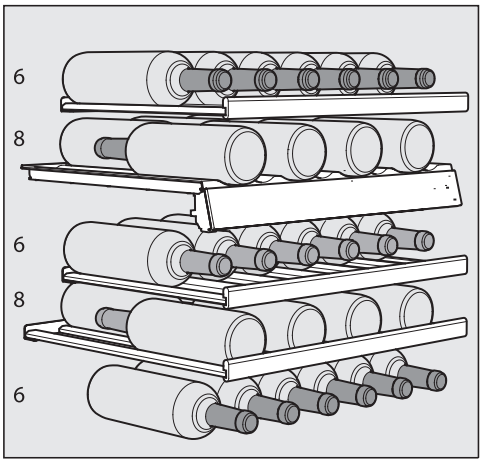

Up to 34 Bordeaux bottles (0.75 l) can be stored in the appliance, with 14 in the upper zone and 20 in the lower zone.

The total of 34 bottles can only be achieved by using all wooden shelves.

Each wooden shelf has a maximum load-bearing capacity of 25 kg.
Do not stack bottles on the wooden shelves.

Condensate and frost can build up on the back wall of the appliance whilst the compressor is running. These are automatically removed and defrosted by the appliance.

Make sure that water cannot get into the electronic unit or the lighting.

Do not use steam cleaning apparatus The steam could reach the electrical components and cause a short circuit.

The data plate inside the appliance must not be removed. It contains information which is required in the event of a service call.

To avoid damaging the surfaces of your appliance, do not use:

– cleaning agents containing soda, ammonia, acids or chlorides,

– cleaning agents containing descaling agents,

– abrasive cleaning agents, e.g. powder cleaners and cream cleaners,

– solvent-based cleaning agents,

– stainless steel cleaning agents,

– dishwasher cleaner,

– oven sprays,

– glass cleaner (except on the glass in the appliance door),

– hard, abrasive sponges and brushes, e.g. pot scourers,

– melamine eraser blocks,

– sharp metal scrapers.

Before cleaning

- Switch the appliance off.
- Disconnect it from the mains.
- Take any wine bottles out of the appliance and store them in a cool place.
- Take out any removable parts for cleaning.
- Remove the magnetic strips from the wooden shelves before cleaning them (see "Annotating wooden shelves").

Cleaning the door, the interior and accessories

Clean the appliance regularly at least once a month.

Remove any soiling immediately - do not allow it to dry on.

- Clean the interior with a solution of lukewarm water and a little washing-up liquid.
- The wooden shelves should only be wiped with a well wrung-out damp cloth. **They must not be allowed to get wet.**
- Use clean water only to wipe the magnetic strips at the front of the wooden shelves. **Do not use a cleaning agent** as this would damage the blackboard paint used on the magnetic strips.
- After cleaning, wipe the interior and accessories with a damp cloth, and dry with a soft cloth. Leave the door open to air the appliance for a short while.
- Use Miele stainless steel conditioning agent (see "Optional accessories") to clean and care for the stainless steel surfaces of the appliance. Unlike stainless steel cleaning agents, the conditioning agent does not contain any abrasive substances and will gently remove soiling. Each time it is used, it forms a water and dirt repellent protective coating.
- Make sure you treat the exterior stainless steel surfaces with Miele stainless steel conditioning agent **each time** you clean them.
  This will give them a water and dirt repellent protective coating and help prevent re-soiling.
- Clean the appliance door with a proprietary glass cleaner.

Ventilation gaps

- The ventilation gaps should be cleaned on a regular basis with a brush or vacuum cleaner. A build-up of dust will increase the energy consumption of the appliance.

Door seal

Do not use any grease or oil on the door seal as these will cause the seal to deteriorate and become porous over time.

- The door seal should be cleaned regularly with clean water and then wiped dry with a soft cloth.

Air filter

- Clean the air filter behind the ventilation grille with a vacuum cleaner at least once a year.
  Remove the air filter and vacuum it thoroughly on both sides.
  A dirty filter can prevent the appliance from cooling sufficiently.

After cleaning

- Replace all shelves and accessories in the appliance.
- Reconnect to the mains and switch the appliance back on.
- Place the wine bottles back in the appliance and close the door.

Fresh air from the room enters the appliance through the active charcoal filter, ensuring a fresh, dust-free, odourless air supply.
The active charcoal filter should be changed approx. every 12 months.

When the Change active charcoal filter indicator lights up the active charcoal filter needs to be changed.

To change the active charcoal filter

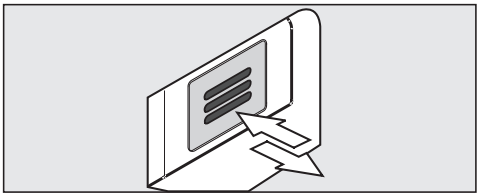

■ Push the filter in and then release it.

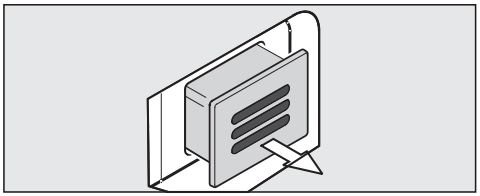

■ Remove the filter.

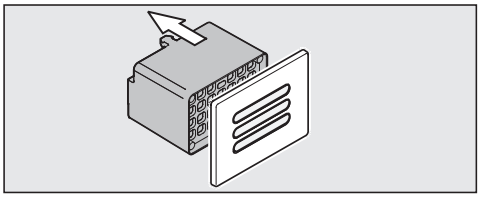

■ Remove the back part of the filter from the cover.

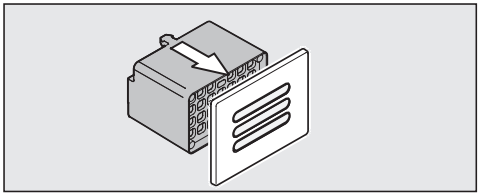

■ Push the new filter onto the cover.

■ Insert the new filter.

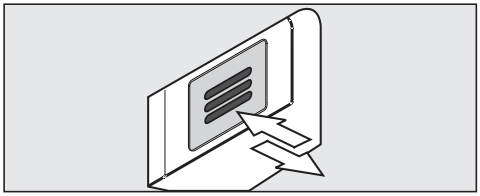

■ Push the filter in and then release it. The filter will lock into place automatically with an audible click.

Active charcoal filters can be obtained from your Miele dealer, Miele or via the internet at www.miele-shop.com.

Active charcoal filter

To confirm the filter has been changed



- Touch the settings sensor.

All symbols available for selection will appear in the display and the symbol flashes.



- Touch the sensors for setting the temperature (∨ or ∧) repeatedly until the symbol flashes.



- Touch the OK sensor to confirm your choice.

The *1* will flash in the display (means: Active charcoal filter is installed in the appliance), the symbol lights up.



- Touch the symbols for setting the temperature (∨ or ∧), until the *2* symbol is displayed (means: the counter has been reset).



- Touch the OK sensor to confirm your choice.

The selected setting is applied, the symbol flashes.



- Touch the settings sensor to leave settings mode.
  Otherwise the appliance exits settings mode automatically after approximately one minute.

The Change active charcoal filter indicator will go out.

Most problems can be corrected without contacting Miele. If, having followed the suggestions below, you still cannot resolve the problem, please contact Miele.

To prevent unnecessary loss of temperature it is advisable not to open the door while waiting for the appliance to be serviced.

Installation, maintenance and repairs may only be carried out by a suitably qualified and competent person in strict accordance with current national and local safety regulations.
Repairs and other work by unqualified persons could be dangerous. The manufacturer cannot be held liable for unauthorised work. .

The appliance is not cooling		
Problem	**Possible cause**	**Remedy**
The interior lighting does not come on when the door is opened and the temperature is not showing in the display.	The appliance has not been switched on.	■ Switch the appliance on. The temperature must light up in the display.
	The plug is not inserted in the socket correctly.	■ Insert the plug correctly into the socket. The mains connection symbol appears in the display when the appliance is switched off.
	Check whether the mains fuse has tripped. If it has there could be a fault with the appliance, the household electrical wiring or another electrical appliance.	■ Contact a qualified electrician or Miele.
The control panel and interior lighting are working.	Demo mode is activated and the symbol appears in the display.	■ Switch off Demo mode (see "Information for dealers - Demo mode").

The compressor runs more frequently and for longer periods of time, the temperature in the appliance drops.		
Problem	**Possible cause**	**Remedy**
The temperature in the appliance is too low.	The temperature setting is too low.	■ Adjust the temperature.
	The appliance door does not close properly.	■ Check why the appliance door is not closing properly.
	The door is being opened frequently.	■ Only open the door when necessary and for as short a time as possible.
	The ventilation gaps have been covered over or have become dusty.	■ Check that the ventilation gaps are not covered up and dust them regularly.
	The air filter is dusty.	■ Clean the air filter (see "Cleaning and care").
	The ambient temperature is too warm.	■ Decrease the ambient temperature.

Warnings in the display		
Problem	**Possible cause**	**Remedy**
The alarm symbol ⚠ lis lit up and both sensors for the wine zones are flashing in the control panel. An audible alarm is also sounding.	The door alarm has been triggered.	■ Close the door. Both sensors and the alarm symbol ⚠ will go out and the audible alarm stops.
The alarm symbol ⚠ and the sensor for one of the wine zones is flashing and an audible alarm also sounds.	The temperature in the zone concerned has risen higher or fallen lower than the temperature set. This could be due to: – the appliance door being opened too often, – a blocked ventilation grille, – a lengthy interruption of the power supply.	■ Rectify the cause of the alarm. The alarm symbol ⚠ goes out and the sensor for the zone concerned lights up constantly. The audible alarm stops.
The Change active charcoal filter indicator lights up.	This is a reminder to change the filter.	■ Replace the active charcoal filter and then confirm the filter change in settings mode (see "Active charcoal filter").
A dash is lit up up/flashing in the display.	Only temperatures within the range the appliance can display will be shown.	
"F1" **to** "F3" **or** "S1" **to** "S9" **appear.**	There is a fault.	■ Call the Miele Service Department.

Interior lighting		
Problem	**Possible cause**	**Remedy**
The interior lighting is not working.	To avoid overheating, the lighting switches itself off automatically after approx. 15 minutes if the door is left open. If this is not the case, then there is a fault.	■ Call the Miele Service Department. Do not remove the lighting covers. Should the covers be damaged or need to be removed due to damage, **exercise caution** . There are lasers in the lighting (laser beam class 1M) which you must not look at directly. Do not use optical instruments (magnifying glass or similar) to look at the lighting.
The interior lighting is on even when the door is closed.	The feature lighting is switched on.	■ Switch the feature lighting off (see "Feature lighting")

Other problems		
Problem	**Possible cause**	**Remedy**
There is no audible alarm although the door has been open for a long time.	This is not a fault. The alarm tone has been switched off in settings mode (see "Selecting further settings - Audible tones").	
You cannot switch the appliance off.	The safety lock is activated. The 🔒. symbol appears in the display.	■ Deactivate the lock (see "Selecting settings - Activating or deactivating the lock").
The slats on the wooden shelves are warping.	Volume change due to moisture absorption or drying out is a typical characteristic of wood. An increase in humidity will cause wooden components to warp, which can lead to cracking. Knots and grain patina are part of the natural character of the wood.	
Mildew has begun to form on the wine bottle labels.	Mildew can begin to form on the labels, depending on the type of label adhesive used.	■ Clean the wine bottles and remove any adhesive residue.

Noises

Normal noises	What causes them
Brrrrr ...	A humming noise is made by the motor (compressor). This noise can get louder for brief periods when the motor switches on.
Blubb, blubb ...	A gurgling noise can be heard when coolant is circulating through the pipes.
Click ...	Clicking sounds are made when the thermostat switches the motor on and off.
Sssrrrrr ...	On multi-zone and frost-free appliances you can sometimes just hear the sound of the fan inside the appliance.
	On appliances with a water container you can sometimes hear the sound of water being pumped out of the water container.
Crack ...	A cracking sound can be heard when materials expand inside the appliance.

Remember that the noise of the compressor and the coolant circulating in the system is unavoidable.

Noises that you can easily rectify	Possible cause	Remedy
Rattling, vibrating	The appliance is uneven.	Realign the appliance using a spirit level, by raising or lowering the screw feet underneath the appliance.
	The appliance is touching another appliance or piece of furniture.	Move it away.
	Drawers, baskets or shelves are unstable or sticking.	Check all removable items and refit them correctly.
	Bottles or containers are touching each other.	Separate them.
	The transport cable clips are hanging loose at the back of the appliance.	Remove the cable clips.

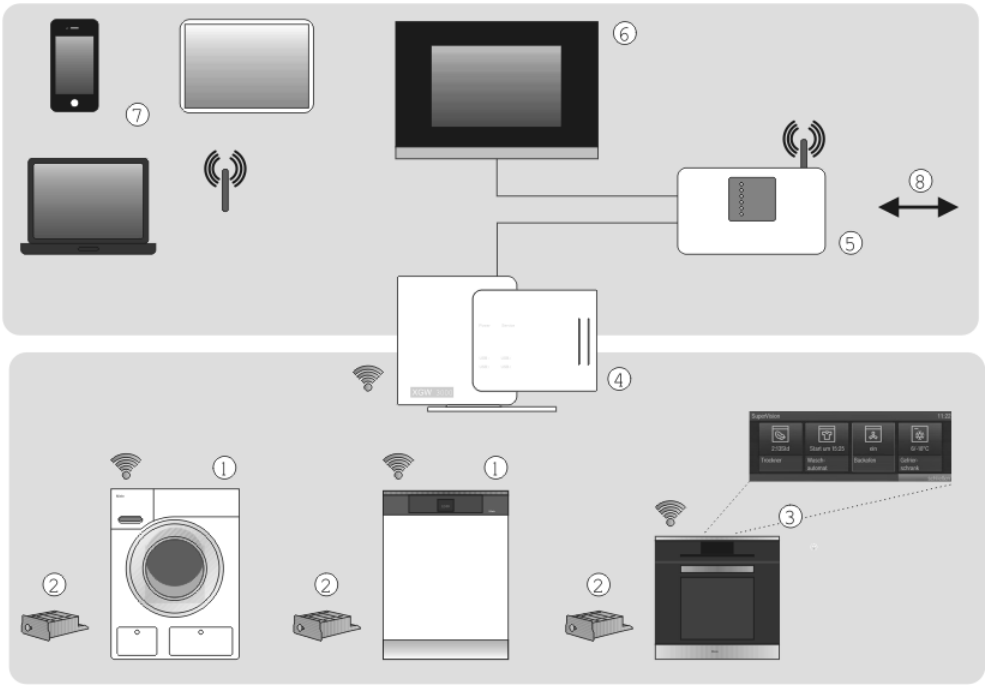

① Miele@home communication enabled appliance

② Miele@home communication module XKM3000Z

③ Miele@home communication enabled Master appliance with SuperVision functionality

④ Miele@home Gateway XGW3000

⑤ WiFi router

⑥ Connection to a Home automation system

⑦ Smartphone, Tablet PC, Laptop

⑧ Internet connection

Miele@home

This appliance ①/③ is communication enabled and can be connected to the Miele@home system via a communication module ② (optional accessory) and a conversion kit where required.

The Miele@home system enables communication enabled appliances to send information via the household wiring network to a master appliance ③ such as an oven with SuperVision function about their operational status, as well as information about the progress of the programme.

Displaying information and controlling appliances

– SuperVision master appliance ③
The status of other signed on appliances can be shown in the display of some communication enabled appliances.

– Mobile appliance ⑦
A PC, Notebook, Tablet PC or a Smartphone can be used within the reception area of a household WLAN ⑤ to display status information about signed on appliances and carry out certain functions.

– Household network ⑥
The Miele@home system enables smart living. The Miele@home Gateway ④ allows other communication enabled appliances to integrate into the household bus system.

  In Germany communication enabled appliances can be integrated into the QIVICON Smart Home Platform instead of the Miele@home Gateway (www.qivicon.de).

SmartStart

Smart grid enabled appliances can be started automatically at a time when electricity costs are favourable or when a sufficient supply of electricity is available (e.g. from a solar power system).

Accessories required

– Communication module XKM3000Z

– Conversion kit for communication system XKV (depending on household appliance)

– Miele@home Gateway XGW3000

These accessories are supplied with their own installation and operating instructions.

Further information

Further information regarding Miele@home is available on the internet and in the instruction manuals of the various components, e.g. the Miele@home Gateway. Please note that the Miele@home and SuperVision system is currently only available in selected countries.

In the event of a fault which you cannot correct yourself, or if the appliance is under guarantee please contact:

– your Miele Dealer

or

– the Miele Service Department.

See end of this booklet for contact details. Please note that telephone calls may be monitored and recorded for training purposes and that a call-out charge will be applied to service visits where the problem could have been resolved as described in this booklet.

When contacting your Dealer or Miele, please quote the model and serial number of your appliance.

This information is given on the data plate inside your appliance.

Guarantee: U.K.

In the U.K. the appliance is guaranteed for 2 years from the date of purchase. However, you must activate your cover by calling 0330 160 6640 or registering online at www.miele.co.uk.

Guarantee: Other countries

For information on the appliance guarantee specific to your country please contact Miele.

See end of this booklet for contact details.

Information for test institutes

All tests must be carried out according to **relevant standards and directives**.

In addition, the following information provided by the manufacturer must be observed:

– **Loading instructions**,

– Information contained in the **Operating and installation instructions**.

Demo mode

The appliance can be demonstrated in the showroom or at exhibitions in "Demo mode". In this mode the control panel and interior lighting are active but the compressor remains switched off, so that the appliance does not cool down.

Switching on demo mode



- Switch the appliance off using the On/Off sensor.

The two sensors for the wine zones go out in the control panel. The temperature display goes out and the mains connection symbol appears in the display.



- Place your finger over the ∨ sensor, and leave it there.



- At the same time, briefly touch the On/Off sensor (without letting go of the ∨ sensor).



- Leave your finger on the ∨ sensor until the symbol appears in the display.
- Then release the ∨ sensor.

Demo mode is switched on and the symbol appears in the display.

Switching off demo mode

The symbol is lit up in the display.



- Touch the settings sensor.

All symbols available for selection appear in the display and the symbol flashes.



- Touch the sensors for setting the temperature (∨ or ∧), repeatedly until the symbol flashes.



- Touch the OK sensor to confirm the choice.

The *1* flashes in the display (means: demo mode is activated), the symbol lights up.



- Touch the ∨ or ∧ sensors, until *0* appears (means: Demo mode is deactivated).



- Touch the OK sensor to confirm the choice.

The selected setting is applied, the ▮ symbol flashes.



- Press the settings sensor to leave settings mode.
  Otherwise the appliance exits settings mode automatically after approximately one minute.

Demo mode is switched off, the ▮ symbol goes out.

Electrical connection U.K.

All electrical work should be carried out by a suitably qualified and competent person in strict accordance with current local and national safety regulations (BS 7671 in the UK).

The appliance is supplied with a mains cable and moulded plug ready for connection to an a.c. single phase 220-240 V 50 Hz supply.

Please ensure that the connection data quoted on the data plate match the household mains supply.

Connection should be made via a suitable switched socket which is easily accessible. It must not be located behind the appliance. For extra safety it is advisable to protect the appliance with a suitable residual current device (RCD).

Do not connect the appliance to the mains electricity supply by an extension lead. Extension leads do not guarantee the required safety of the appliance (e.g. danger of overheating).

This appliance must not be connected to the inverter of an autonomous power supply, e.g. a solar power system. When switching the appliance on, a surge in power could trigger the safety cut-out mechanism. This could damage the electronic unit.

The appliance must not be used with so-called energy saving devices. These reduce the energy supply to the appliance which could then become too warm. Using such devices could alter the specification of the product.

If the connection cable has to be replaced, this must be done by a suitably qualified and competent person.

Do not plug other appliances in behind this appliance

Non-rewireable plugs (BS 1363)

The fuse cover must be re-fitted when changing the fuse, and if the fuse cover is lost, the plug must not be used until a suitable replacement is obtained. The colour of the correct replacement cover is that of the coloured insert in the base of the plug, or the colour that is embossed in words in the base of the plug (as applicable to the design of the plug fitted).

Replacement fuses should be ASTA approved to BS 1362 and have the correct rating. Replacement fuses and fuse covers may be purchased from your local electrical supplier.

WARNING
THIS APPLIANCE MUST BE EARTHED

This appliance must be built in, otherwise it could tip up.

Side-by-side installation

To avoid a build-up of condensation and resultant damage, refrigeration appliances should not generally be installed side by side next to other such appliances.

However this wine conditioning unit can be installed side by side with certain models.

Your dealer will be able to advise you on which combination of models is possible.

Location

This appliance should not be installed where it is exposed to direct sunlight or directly adjacent to a heat-producing appliance such as an oven or a radiator. The room temperature should not go above or below the climate range for which the appliance is designed. The higher the ambient temperature of the room, the more energy the appliance requires to operate. The appliance should be installed in a dry, well ventilated room.

When installing the appliance, please be aware:

– The socket must be easily accessible in an emergency, not concealed behind the appliance.

– The plug and cable must not touch the rear of the appliance as they could be damaged by vibrations from the appliance.

– Do not plug in other appliances behind this appliance.

Climate range

The appliance is designed for use within a certain climate range (ambient temperatures) and should not be used outside this range. The climate range of the appliance is stated on the data plate inside the appliance.

Climate range	Ambient room temperature
SN	+10 °C to +32 °C
N	+16 °C to +32 °C
ST	+16 °C to +38 °C
T	+16 °C to +43 °C

Operating in a room which is too cold will cause the compressor to switch off for too long, causing the internal temperature in the appliance to rise.

Ventilation

The appliance is ventilated via the grille in the plinth.

The air in the appliance plinth gets warm. It is very important that air can flow freely within the niche to ensure that the appliance can cool effectively.

The ventilation grille in the appliance plinth must not be covered or blocked in any way. They should be dusted on a regular basis.

The **ventilation grille supplied** must be fitted and used in conjunction with the **foam block supplied**.

The cut-out in the plinth facing must be aligned centrally with the appliance.

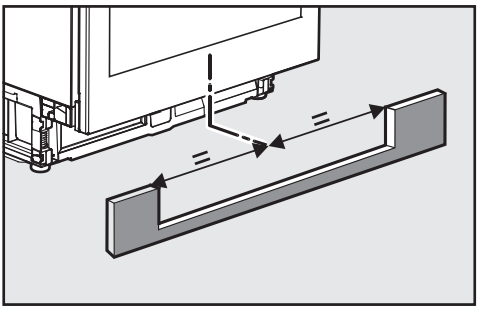

Before installing the appliance

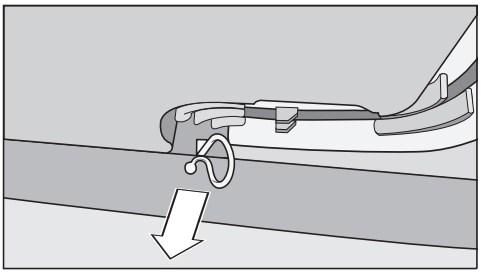

- Remove the cable clip from the back of the appliance.
- Check that all parts at the back of the appliance are unhindered. Carefully remove any hindrance.

Door opening angle limiter

The door opening angle limiter restricts the opening angle to 90°. This may be necessary if the appliance door hits an adjacent wall when opened, for example.

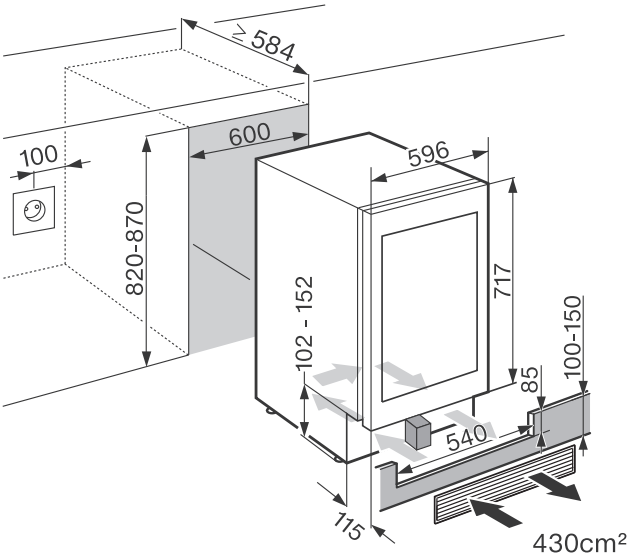

Before installation, ensure the building-in niche is the correct size. The specified ventilation cross-sections must be adhered to and the cut-out in the plinth facing must be aligned centrally with the appliance in order to ensure the correct functioning of the appliance.

The ventilation grille supplied and foam block supplied must be fitted and used together.

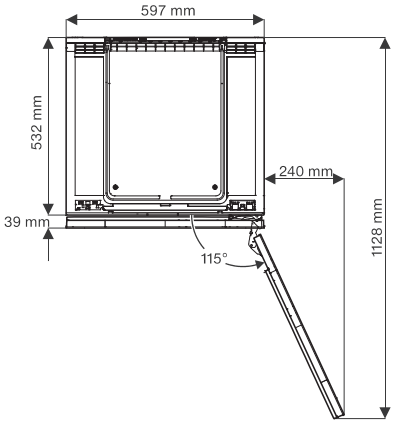

Changing the door hinging

The door hinging should be changed by authorised service personnel only.

Two people are needed for changing the door hinging.

The appliance is supplied right-hand hinged. If left-hand hinging is required, the hinges must be changed.

Spread a suitable covering on the floor in front of the appliance to protect the glass door.

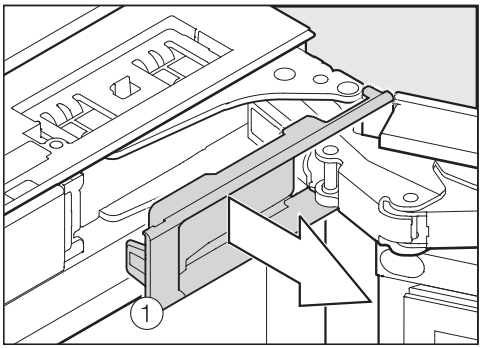

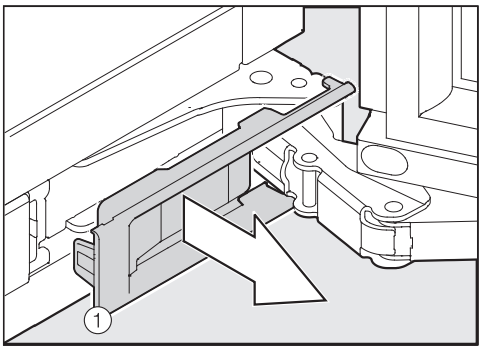

■ Remove covers ①.

⚠ The second person must support the door.
Caution. When the hinge is subsequently released, the door is no longer secure.

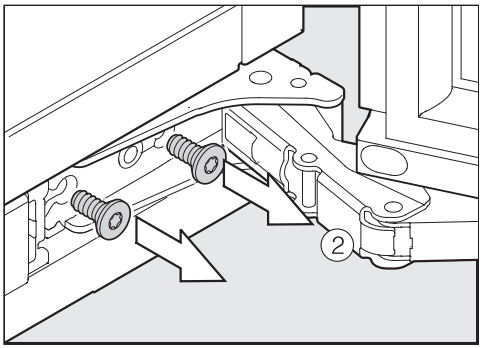

■ Remove screws ② first from the lower hinge.

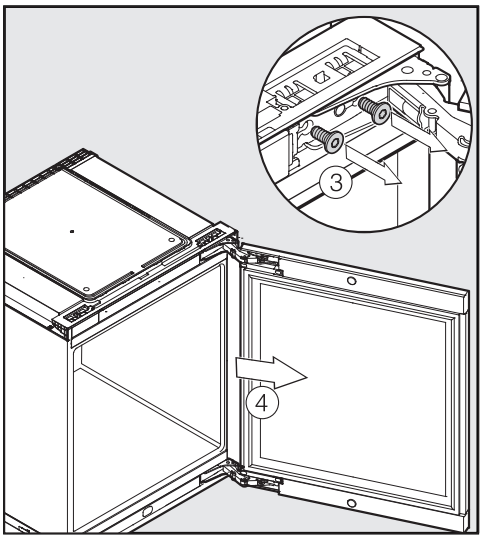

■ Remove screws ③ from the upper hinge.

■ Remove appliance door ④.

- Place the door with the outer side upwards on a stable surface.

Do not close the hinges. Danger of injury.

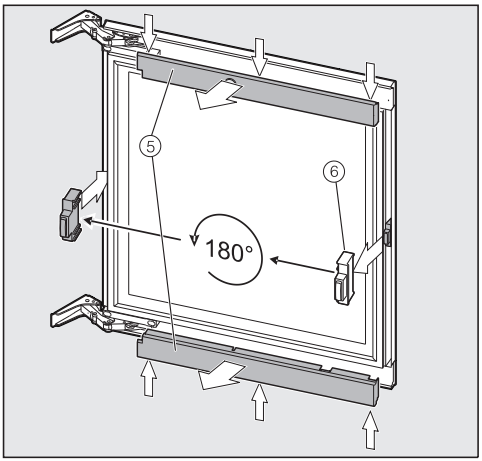

- Unclip upper and lower covers ⑤.
- Remove spacer ⑥ from the appliance door, rotate it through 180 °C and place it on the opposite side.

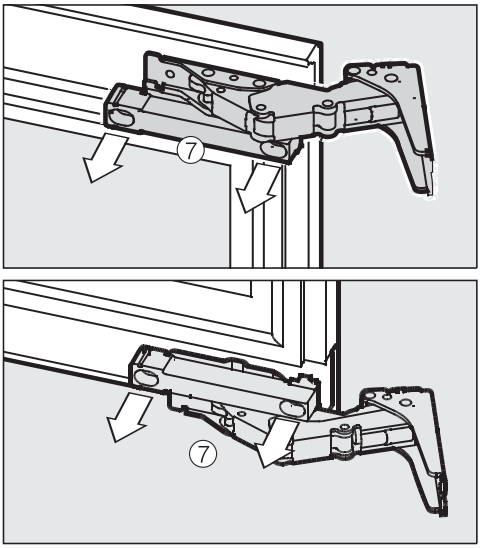

- Remove screws ⑦ completely.

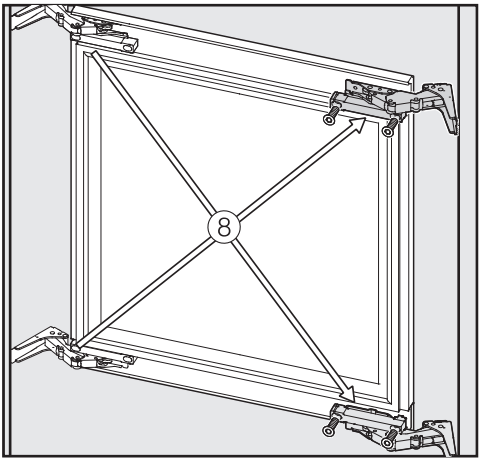

- Replace the hinges in their diagonally opposite corners ⑧.

Changing the door hinging

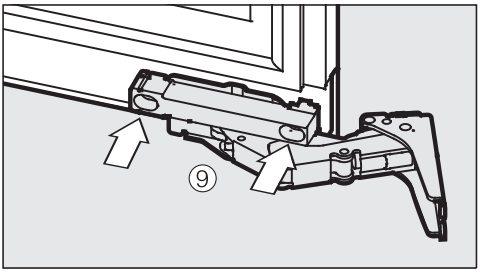

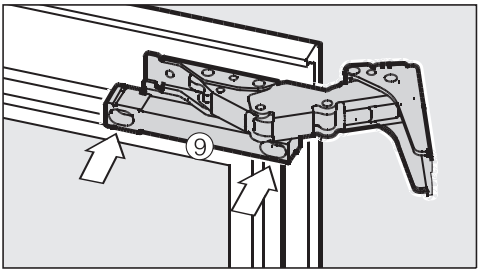

■ Replace screws ⑨ again.

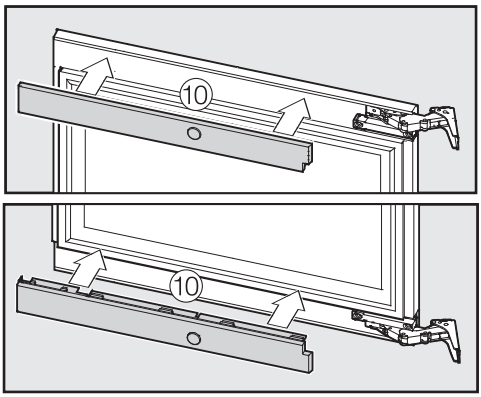

■ Clip covers ⑩ back on. Note the position of the notches on the hinges.

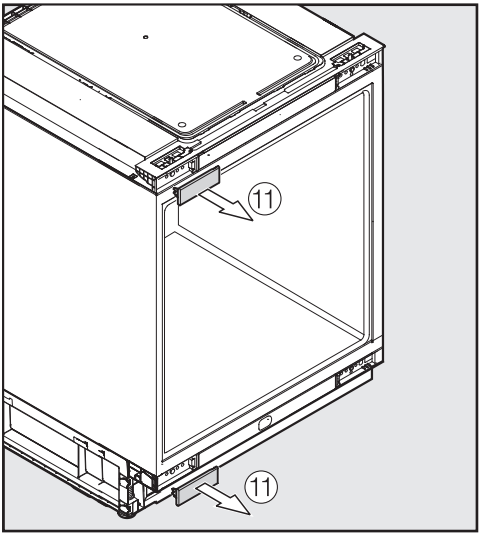

■ Remove covers ⑪.

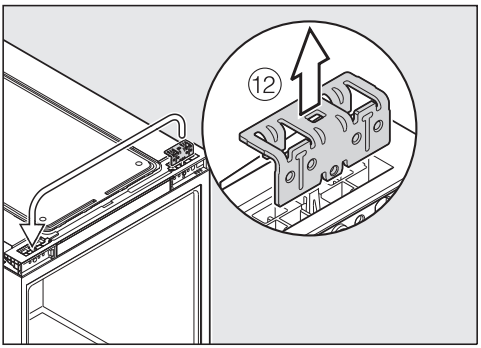

■ Take off upper retaining bracket ⑫ and replace it on the opposite side.

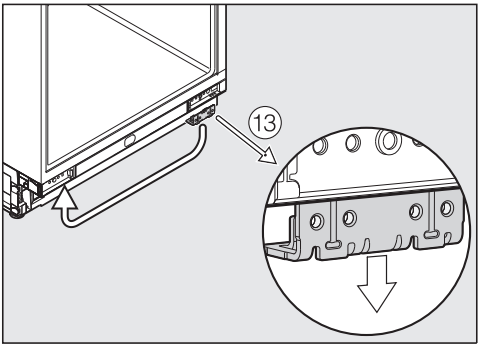

■ Take off lower retaining bracket ⑬ and replace it on the opposite side.

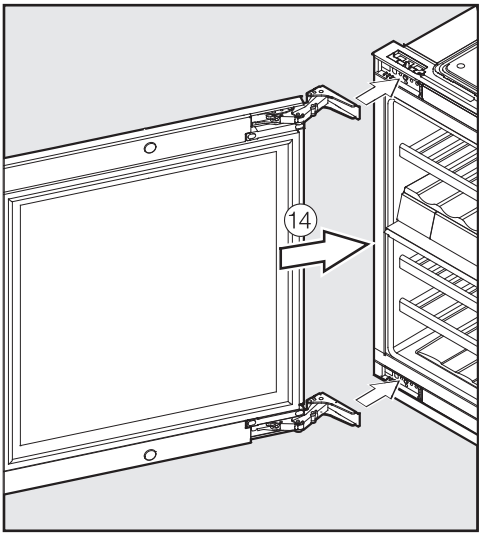

■ Refit door ⑭.

⚠ The second person must support the door.

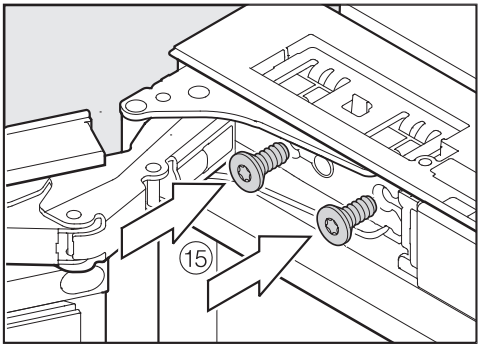

■ Tighten the screws in upper hinge ⑮.

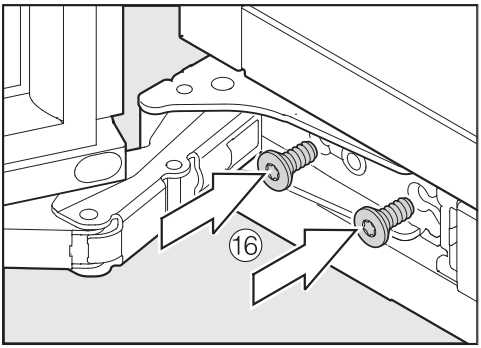

■ Tighten the screws in lower hinge ⑯.

■ The appliance can now be built under.

Two people are required for installing the appliance.

- The appliance must be installed in a stable and correctly aligned niche on a level surface.
- The niche must be horizontally and vertically aligned.
- The required ventilation cross-sections must be ensured (see "Installation - Ventilation" and "Building-in dimensions").

To install the appliance, you will need the following tools:

– Screwdrivers of various sizes

– Spirit level

– Tape measure

The following installation parts are required:

– Ventilation grille

– Air filter

– Foam block for air intake through the appliance plinth

– Screws to secure the appliance in the niche

– Spanner to adjust height in the niche

Preparing the appliance

The air filter prevents soiling of the compressor compartment to ensure efficient functioning of the appliance.

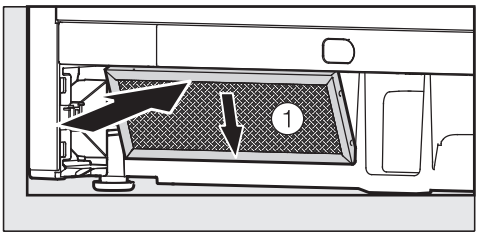

- Carefully remove the protective foil from air filter ①.
- Insert the air filter into the bottom left of the appliance plinth.
- Connect the appliance to the mains electrical supply (see "Electrical Connection").

■ Push the appliance in front of the niche.

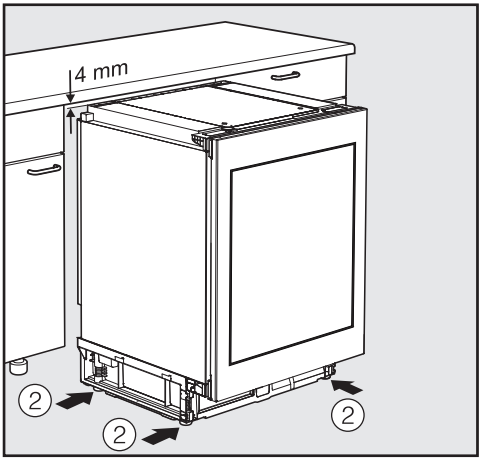

■ Screw adjusting feet ② to 4 mm less than the height of the niche.

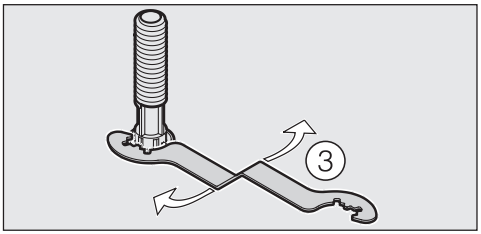

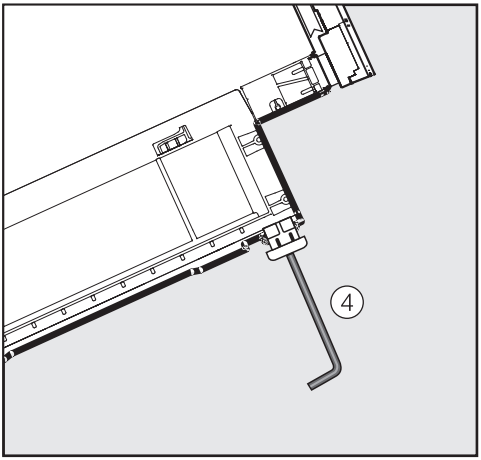

The feet can be adjusted with the spanner wrench supplied ③ or with an allen key ④.

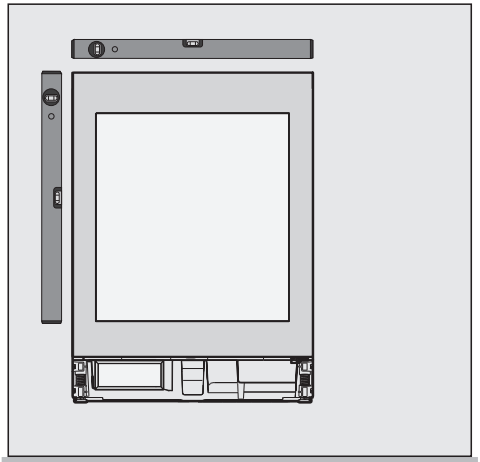

Align the appliance horizontally and vertically. If it is not level the appliance can distort.

- Check the alignment of adjacent furniture housing doors.
  If adjacent doors vary in height from the wine conditioning unit, see "Aligning the appliance to taller furniture doors".
  If adjacent furniture doors are the same height as the appliance:
- Open the door by pushing on the front of the door.
  The door opener ⑤ will be protruding.

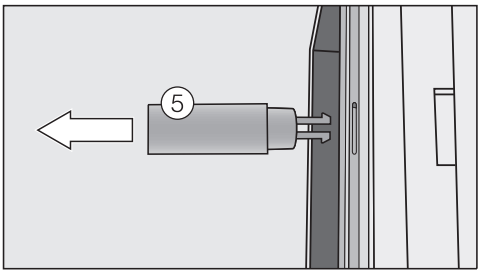

- Deactivate the door opening mechanism by pulling out the door opener.

Aligning the appliance to taller furniture doors

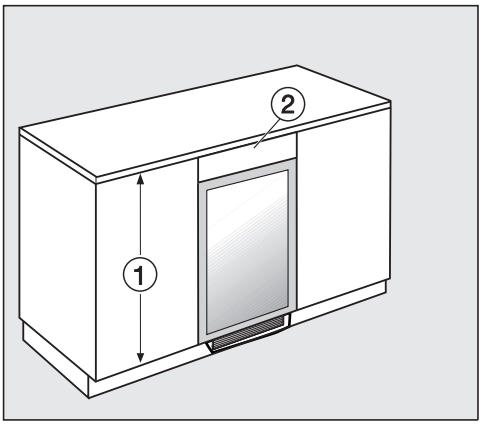

If adjacent furniture housing doors ① are taller than the wine conditioning unit door, the wine conditioning unit can be aligned to the unit doors using a filler panel ②.

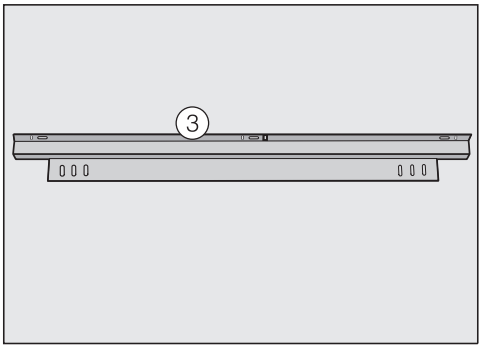

A bracket ③ is required to secure the filler panel, which is available from the Miele Spare Parts Department or from your dealer. The filler panel can be fitted above or below the appliance as required.

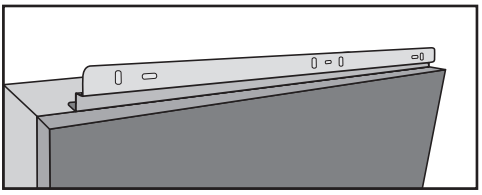

To avoid damaging the appliance the ventilation grille must be positioned directly in front of the ventilation outlet. If you wish to fit a plinth facing across the front of the appliance make sure it does not obstruct the ventilation grille.

The filler panel must be made exactly to measure.

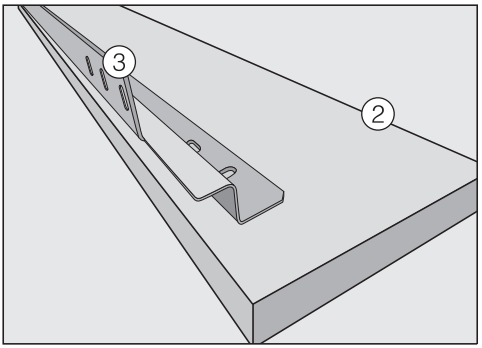

- Fix bracket ③ to the back of filler panel ②.
- Pull the appliance as far as you need to out of the niche so that you can tilt it towards you.

- Loosely hand-screw the bracket with the filler panel to the appliance.
- Align the filler panel to the door of the wine conditioning unit over the long slots to give a flush finish.
- Now tighten the screws.
- The appliance is now ready to be pushed into the niche.

Push the appliance into the niche

Make sure that the electricity cable does not become trapped or damaged as you push the appliance into its niche.

To avoid damaging the surface of flooring which is susceptible to scratching, take great care when pushing the appliance into its niche.

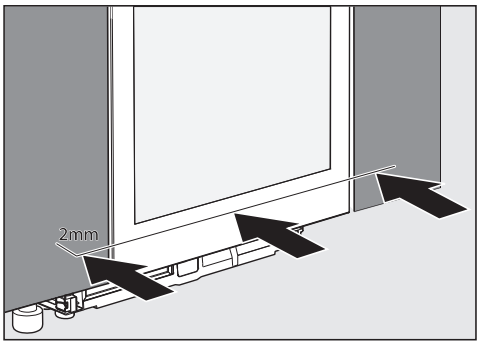

- Push the appliance into the niche until the front of the appliance door is flush with surrounding furniture doors.
- Pull the appliance forward so that it stands proud of the furniture doors evenly by 2 mm

Securing the appliance in the niche

- The appliance stands proud of the furniture doors evenly by 2 mm.
- Open the appliance door.

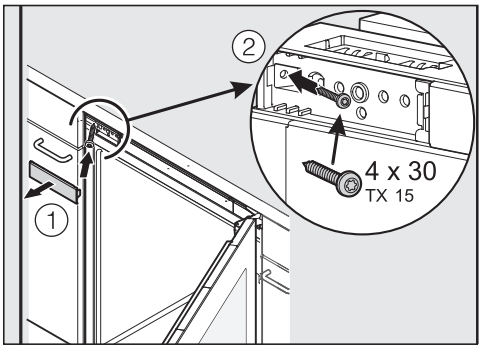

- Remove cover ① and first screw the appliance to the adjacent furniture unit at the top left ②.

The appliance will align itself to the left side of the niche.
The front of the appliance door is flush with the furniture front.

- Replace cover ①.

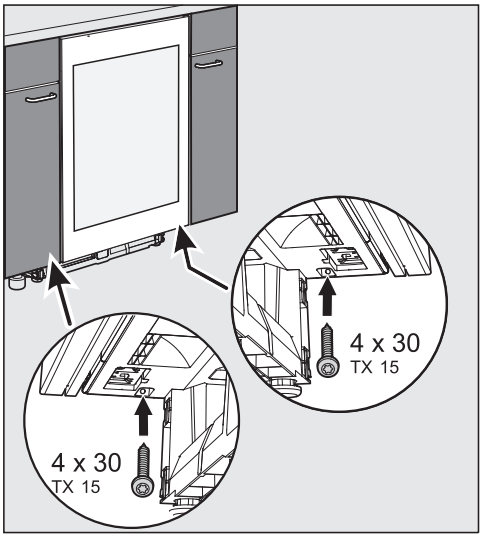

- Screw the appliance bottom left and right ③ to the adjacent furniture units.
- The appliance can be secured with a fourth screw at the top right if required.

  This will require the door to be removed in order to fit the additional screw.

■ Close the door and check that the side edges of the door are aligned with the side walls of the appliance.

Adjusting the lateral alignment of the appliance door

If the appliance door is not aligned with the housing side walls, the appliance door can be adjusted using the screws underneath the hinges.

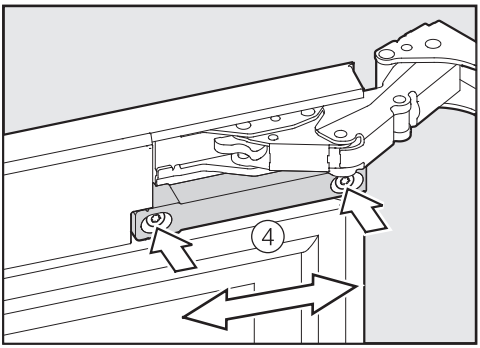

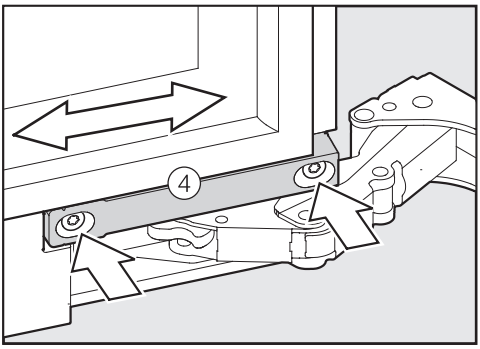

■ Loosen screws ④ and align the door.

■ Tighten screws ④ again.

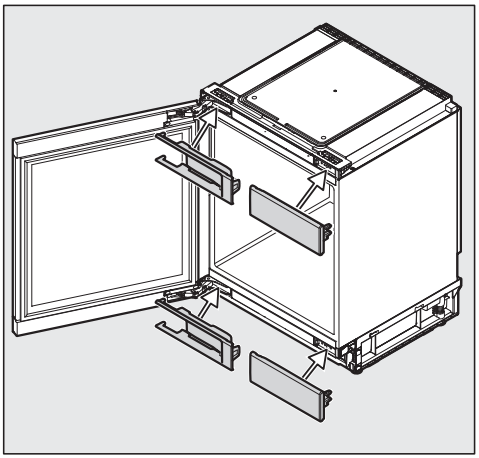

■ Fit the covers.

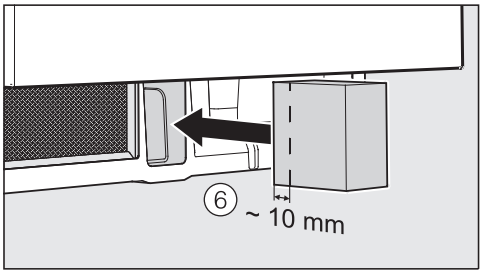

■ Insert foam block ⑥ supplied into the appliance plinth.

If the foam block is not fitted, the appliance will not achieve optimum cooling and can suffer damage.

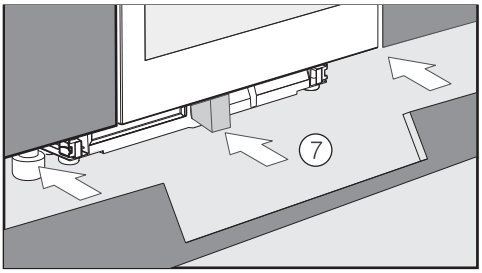

■ Fit plinth facing ⑦.

The cut-out in the plinth facing must be aligned centrally with the appliance.

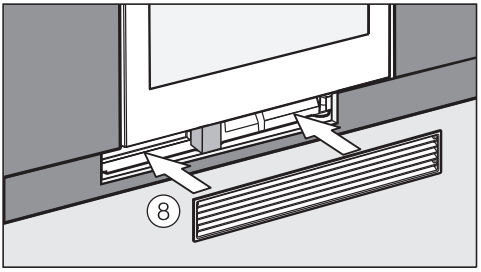

■ Fit ventilation grille ⑧ into the plinth facing. As you do this the foam block will be pushed back.

The foam block must be resting against the ventilation grille in order to separate the airflow.

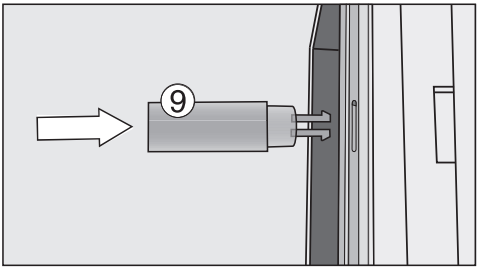

■ Replace door opener ⑨ to activate the door catch.

United Kingdom
Miele Co. Ltd.
Fairacres, Marcham Road
Abingdon, Oxon, OX14 1TW
Customer Contact Centre Tel: 0330 160 6600
E-mail: mielecare@miele.co.uk
Internet: www.miele.co.uk

Australia
Miele Australia Pty. Ltd.
ACN 005 635 398
ABN 96 005 635 398
1 Gilbert Park Drive, Knoxfield, VIC 3180
Tel: 1300 464 353
Internet: www.miele.com.au

China
Miele (Shanghai) Trading Ltd.
1-3 Floor, No. 82 Shi Men Yi Road
Jing' an District
200040 Shanghai, PRC
Tel: +86 21 6157 3500, Fax: +86 21 6157 3511
E-mail: info@miele.cn, Internet: www.miele.cn

Miele (Hong Kong) Limited
41/F - 4101, Manhattan Place
23 Wang Tai Road
Kowloon Bay, Hong Kong
Tel: (852) 2610 1331, Fax: (852)2610 1013
Email: mielehk@miele.com.hk

India
Miele India Pvt. Ltd.
Ground Floor, Copia Corporate Suites
Plot No. 9, Jasola
New Delhi - 110025
Tel: 011-46 900 000, Fax: 011-46 900 001
E-mail: customercare@miele.in, Internet: www.miele.in

Ireland
Miele Ireland Ltd.
2024 Bianconi Avenue
Citywest Business Campus, Dublin 24
Tel: (01) 461 07 10, Fax: (01) 461 07 97
E-Mail: info@miele.ie, Internet: www.miele.ie

Manufacturer: Miele & Cie. KG
Carl-Miele-Straße 29, 33332 Gütersloh, Germany

Malaysia
Miele Sdn Bhd
Suite 12-2, Level 12
Menara Sapura Kencana Petroleum
Solaris Dutamas No. 1, Jalan Dutamas 1
50480 Kuala Lumpur, Malaysia
Phone: +603-6209-0288
Fax: +603-6205-3768

New Zealand
Miele New Zealand Limited
IRD 98 463 631
Level 2, 10 College Hill
Freemans Bay, Auckland 1011, NZ
Tel: 0800 464 353
Internet: www.miele.co.nz

Singapore
Miele Pte. Ltd.
163 Penang Road
04 - 03 Winsland House II
Singapore 238463
Tel: +65 6735 1191, Fax: +65 6735 1161
E-Mail: info@miele.com.sg
Internet: www.miele.sg

South Africa
Miele (Pty) Ltd
63 Peter Place, Bryanston 2194
P.O. Box 69434, Bryanston 2021
Tel: (011) 875 9000, Fax: (011) 875 9035
E-mail: info@miele.co.za
Internet: www.miele.co.za

United Arab Emirates
Miele Appliances Ltd.
P.O. Box 11 47 82
Gold & Diamond Park, Sheikh Zayed Road
Building 6 / Offices Nos. 6-214 to 6-220
Dubai
Tel: +971-4-341 84 44
Fax: +971-4-341 88 52
E-Mail: info@miele.ae
Internet: www.miele.ae

Miele

KWT 6322 UG

CE

en - GB

M.-Nr. 09 875 620 / 02